SM SOLAR MOUNT

DESIGN & ENGINEERING GUIDE

SOLARMOUNT: FLUSH-TO-ROOF DESIGN

PUB2021JAN25

Table of Contents

Getting Started - Introduction

This manual is for professional engineers and permitting authorities. For assistance with your array's engineering and a Bill of Materials, see our U-Builder at http://design.unirac.com

SOLARMOUNT Flush-to-Roof is an extruded aluminum rail system that is engineered to hold most framed solar modules to a roof structure and installed parallel to the roof. With SOLARMOUNT, you'll be able to solve virtually any PV module mounting challenge.

Some of the features of this product include:

- Integrated Full System Grounding and Bonding to UL 2703
  - Integrated Bonding Rail Splice
  - Integrated Bonding Module Midclamp Assembly
  - Module Endclamp Assembly
  - Bonding Microinverter Mounting Bolt Assembly
  - Integrated Bonding L-Foot T-Bolt
- Module Landscape (with rails running north/south) or Portrait (with rails running east/west) Orientations
- Works with Most Framed Modules
- Wire Management Clip
- Designed per the ASCE 7-05 and ASCE 7-10 Building Code
- Component Testing
- Rigorous Engineering Analysis
- Superior Aesthetics
  - Optional Front Trim
  - Optional End Caps (SOLARMOUNT Standard and Light Rail Only)

Installer Responsibility & Disclaimer

Please review this guide and the SOLARMOUNT Installation Guide thoroughly before installing your SOLARMOUNT system. These guides provide supporting documentation for building permit applications, planning, and assembling the SOLARMOUNT system.

The installer is solely responsible for:

- Complying with all applicable local or national building codes, including code requirements that can be more stringent than the guidelines set forth in this manual;
- Maintaining and enforcing all aspects of a safe working environment;
- Ensuring that Unirac and other products are appropriate for the particular installation and the installation environment;
- Ensuring that the roof, its rafters, connections, and any other structural support members can support the array under all code level loading conditions (this total building assembly is referred to as the building structure);
- Using only Unirac parts and installer-supplied parts as specified by Unirac (substitution of parts may void the warranty and invalidate the letters of certification in all Unirac publications);
- Ensuring that lag screws have adequate pullout strength and shear capacities as installed;
- Verifying the strength of any alternate mounting if used in lieu of the lag screws;
- Maintaining the waterproof integrity of the roof, including selection and proper installation of appropriate flashing;
- Ensuring safe installation of all electrical aspects of the PV array, including proper grounding/bonding;
- Array shading and output analysis;
- Ensuring correct and appropriate design parameters are used in determining the design loading used for design of the specific installation. Parameters, such as snow loading, wind speed, exposure and topographic factor should be confirmed with the local building official or a licensed professional engineer.

Unirac shall not be liable for any losses, damages, or injuries that directly or indirectly result from any non-conformance with the above.

Design Methodology

SOLARMOUNT was designed using the *Minimum Design Loads for Buildings and Other Structures* by the *American Society of Civil Engineers and Structural Engineering Institute*, 2005 and 2010 editions. These are referred to as ASCE 7-05 and ASCE 7-10, respectively. Three methods have been provided to aid in design of your project. The use of these methods is discussed in the *Project Requirements & Design Aid* section in the next page.

Quick Note – The online U-Builder is highly recommended for all qualifying projects. It will provide you with a Bill of Materials, Certification Letter, and Calculations for your project. Please review Table 1 in the *Project Requirements and Design Aid* section of this Guide.

Project Requirements & Design Aid

Table 1 - Project Requirements & Design Aid

Project Requirements (Blank Cells for Project Specific Input Provided for your Convenience)		Design Aid					
		U-Builder[1a] (Online Design Tool)		Prescriptive Design Method[1b]		Do It Yourself[1c] (Analytical Method)	
		ASCE 7-05	ASCE 7-10	ASCE 7-05	ASCE 7-10	ASCE 7-05	ASCE 7-10
Project Name:							
Project Address:							
AHJ (Authority Having Jurisdiction):							
Current Adopted Building Code:							
Local Jurisdiction Code Amendments:							
Occupancy/Risk Category*:		II		II		As Permitted by Code	
Basic Wind Speed*:		85-150 mph	110-170 mph	***	***	As Permitted by Code	
Wind Exposure Category*:		B or C		B, C or D		As Permitted by Code	
Ground Snow Load*:		0-60 psf		***		As Permitted by Code	
Seismic Coefficient, Ss*:		≤ 3.1g		≤ 3.1g		As Permitted by Code	
Roof Height (Eave & Ridge)*:		≤ 30 feet		≤ 60 feet		As Permitted by Code	
Roof Slope*:		0-45 Degrees		0-45 Degrees		As Permitted by Code	
Roof Zone(s)*:		1, 2, or 3		1, 2, and 3		As Permitted by Code	
Framed Module Type & Module*:		User Input		Most 60 and 72 Cell		User Input	
Module Weight*:		Module Dependent		See Appendix E		User Input	
Module Dimensions*:		Module Dependent		Module Dependent		User Input	
Total Module Quantity*:		Up to 50 x 50		Unlimited		User Input	
Design Method:		Allowable Stress Design		Allowable Stress Design		Unlimited**	
Project Specific Calculations for Solar System Provided:		Yes		No		No	
Stamped/Certified Engineering Letter for Solar System Provided:		Yes		Yes		No	
Bill of Materials for Unirac Components of Solar System Provided:		Yes		No		No	

* Requirements must fall within defined range to utilize specified design aid.

** The design professional could use the appropriate code to perform the design in LRFD, LSD, or ASD. The ASD procedure for the Analytical Method has been provided.

*** Prescriptive Pressure tables located in Appendix B and Online. Pressure Tables exist for Basic Wind Speeds of 85-170 mph for ASCE 7-05 and 110-190 mph for ASCE 7-10.

1a. U-Builder: This is an easy-to-use online design tool that is recommended for all preliminary and final designs, estimating, and layout validation. It is located on our website at www.unirac.com.

The U-Builder allows for a customized project design that results in a final design, bill of materials, price quote and stamped/certified engineering approval letters.

1b. Prescriptive Design Method: This method is a simplified approach to the design of your SOLARMOUNT project. This method is recommended when computers or internet access is not available. Once project specific requirements are known, the project design load pressures can be looked up in the Pressure Lookup Tables located in Appendix B. If additional tables are needed, they can be found online at www.unirac.com.

1c. Do It Yourself (Analytical Method): This design approach follows the ASD calculations step by step through both the ASCE 7-05 and 7-10 design codes. Equations, figures, tables, and commentary are provided for your convenience to aid in generating the specific design load pressures for your loading conditions, such as wind and snow. This method has been provided for design or layout requirements that fall outside of the other two options or for design professionals that prefer to perform their own calculation package.

Prescriptive Design Method - Quick Design Steps

Step 1: **Define Project Requirements**

a. Fill in the *Table 1 - Project Requirements & Design Aid* on previous page.

b. Once project specific information is determined, confirm that the Prescriptive Design Method may be utilized.

c. Review the Prescriptive Pressure Tables in the Appendix to see if they meet your needs. If a more precise design is needed (if the tables in the Appendix don't meet your project requirements, but per Table 1, you can still utilize the Prescriptive Design Method) please utilize the online tool for design.

Step 2: **Create Initial Array Layout**

a. Identify the structural supporting members of your building. A sketch/drawing of the roof/building with location of supporting members, vents, skylights, cable/wires, areas to avoid, etc., is highly recommended.

b. Create a "rough draft" layout of solar modules on the actual project roof. (Refer to the SOLARMOUNT Installation Guide.)

Step 3: **Determine Array Design Pressure by Roof Zone to Select a Rail Span**

a. Using information in Steps 1 & 2, select a Prescriptive Pressure Table contained Appendix B or online.

b. Use fill-in boxes below to document your project specific pressures and tables utilized.

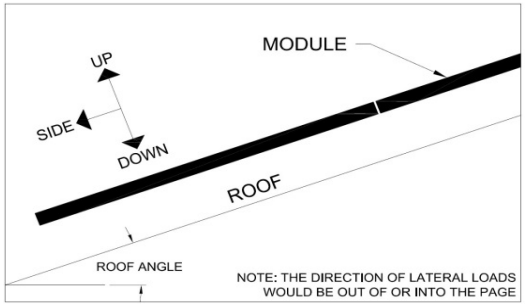

Pressure Table Used:

Basic Wind Speed -	
Building Height -	
Exposure Category -	
Seismic Coefficient (Ss) -	
Roof Pitch -	
Ground Snow Load -	

Controlling Pressure:

	Up (psf)	Down (psf)	Side (psf)	Lateral (psf)
Roof zone 1:				
Roof zone 2:				
Roof zone 3:				

Note: For Low Profile Mode, where rails are perpendicular to the roof tilt (E-W Rails), "Side Load" (Down Slope) is load applied in weak axis bending of the SOLARMOUNT rail along the roof tilt and "Lateral" is load applied as an axial load along the SOLARMOUNT rail perpendicular to the roof tilt. For High Profile Mode, where rails are parallel to the roof tilt (N-S Rails), "Side Load" (Downslope) is load applied in as an axial load along the SOLARMOUNT rail perpendicular to the roof tilt and "Lateral Load" is applied in weak axis bending of the SOLARMOUNT rail along the roof tilt.

c. Convert pressures (lbs/ft² or psf) from the boxes just filled in to pounds per linear foot (lb/ft or plf) using the following steps:

   i. Pressure (from table above) * Area of Module = Total Pounds per Module

   ii. Total Pounds Per Module / 2 (Number of rails) = Pounds Per Rail

   iii. Pounds Per Rail / Width of Module Parallel with the Rail = Pounds per Linear Foot (plf)

d. Use the *Downward and Upward Span Length Tables* in Appendix C with the plf loads to determine maximum spans.

   i. Look up the table "Downward Span Lengths". Using the "Down" plf load and the "Side" plf load combinations, choose the maximum span length in the table.

   ii. Look up the table "Uplift Span Lengths" and using the "Up" plf and "Side" plf load combinations to choose the maximum span length.

   iii. Use the smaller length of the "Down" and "Up" maximum span length.

   iv. Cantilever (overhang) lengths can be up to 33% of the span length. For example, a 9 foot span length can have a 3 foot cantilever. The cantilever is defined as the distance from the center of a L-Foot to the edge of a rail.

Step 4: **Determine Load to the Roof**

*The U-Builder online can automatically calculate maximum point loads to the roof.

a. To determine the load on the roof through the attachment:
   i. Determine the tributary area to each attachment.
   ii. Review the controlling pressure in Step 3b.
   iii. Determine pressure zones on the roof per ASCE 7-05, Figure 6-3 or ASCE 7-10, Figure 30.5-1.
   iv. Multiply the tributary area by the roof pressure to obtain loads to the roof attachment.
   v. Determine the point load to the roof at each attachment.

Step 5: **Check Roof Load**

a. Ensure that the supporting structure is capable of withstanding the additional loads imposed by the proposed solar system.

Step 6: **Check the Connections**

a. Similar to Step 3c, determine the tributary area to each connection and the applied load from the Controlling Pressures table in Step 3.
b. Convert the applied psf loads into pounds through tributary area.
c. Look up the Technical Data Sheets in Appendix G for maximum permissible load to each connection.
d. From Step 4, determine if the attachment (lag bolt or other appropriate attachment) is capable of withstanding the point loads applied.
e. If the maximum permissible load is greater than the applied load, then the connections are adequate.

Step 7: **Define Grounding and Bonding Path**

a. Refer to the Installation Guide for how to determine the Grounding and Bonding Path.

Step 8: **SOLARMOUNT Front Trim Check**

a. SOLARMOUNT Front Trim should not be installed in areas where the wind load exceeds 100 psf, where the distance from clamp to clamp (span) exceeds 52 inches, or where the cantilever (overhang) is greater than 66% of the span length. To determine your pressure, please use Appendix B. You will need to review the table assosciated with your project wind speed and no snow, and review the Up and Down Loads (psf) to determine if SOLARMOUNT Front Trim is appropriate for your project.

ASCE 7-05 Analytical Method

Step 1: **User Inputs (ASCE 7-05)**

Roof Height (ft):		Mean roof height (15 ft, 30 ft, or 60 ft)
Roof Angle (degrees):		Convert roof pitch to angle in degrees **[See Appendix D]**
Basic Wind Speed (mph):		Per Basic Wind Speed - US Map (ASCE 7-05, Figure 6-1)
Wind Exposure Category:		Determine the Exposure Category (B, C or D) by using the definitions for Surface Roughness Categories (ASCE 7-05, Sections 6.5.6.2 and 6.5.6.3)
Roof Zone:		Determine the Roof Zone (1, 2 or 3) (ASCE 7-05, Figure 6-3)
Ground Snow Load (psf):		Pg = Ground Snow Load in psf. Ground Snow Loads (ASCE 7-05, Figure 7-1)
Seismic Coefficient Ss (g):		ASCE 7-05 (Figures 22-1, 22-3, 22-5, 22-7, 22-9 through 22-11, 22-13, and 22-14)
Roof Live Load[1] (psf):		0 psf, 20 psf, etc.
Module Manufacturer/Type:		
Solar Module Length (in):		
Solar Module Width (in):		
Solar Module Weight (lb):		
Module Dead Load (psf)		

Commentary:
1) Most Building Officials allow for all or a portion of the roofs original live load design load to be removed/reduced at the time that solar panels are being added to the roof. The rationale behind this is that live load or roof foot traffic is eliminated or reduced to designated paths. in other words, the roof top solar array and live load foot traffic cannot occupy the same space. If all of the roof live load can be utilized by the proposed solar array, 0 psf should be entered.

Step 2: **Wind Pressure (ASCE 7-05, Chapter 6)**

Wind Pressure Equation - Method 2 - Analytical Procedure (ASCE 7-05, Section 6.5):

Pp=qh (GCpp-GCpi) (ASCE 7-05, Section 6.5.12.4.1) (GCpp - Positive Downforce Factor)

Pn=qh (GCpn-GCpi) (ASCE 7-05, Section 6.5.12.4.1) (GCpn - Negative Uplift Factor)

Gcpi equals zero (per AC428, November 2012) (internal pressure coefficient)

GCp is defined below (ASCE 7-05 Figure 6-11) and is a function of the roof zone, effective wind area (feet squared), and roof angle (degrees) (external pressure coefficient)

GCpp (Positive downforce factor)

GCpn (Negative uplift factor)

(ASCE 7-05, Figure 6-11B) for roof angles ≤ 7°

(ASCE 7-05, Figure 6-11C) for roof angles > 7° and ≤ 27°

(ASCE 7-05, Figure 6-11D) for roof angles > 27° and ≤ 45°

qh = qz

qz=0.00256Kz*Kzt*Kd*V^2*I (ASCE 7-05, Section 6.5.10)

Kz	Velocity Pressure Coefficient (ASCE 7-05, Table 6-3)
Kzt	Topographic Factor (ASCE 7-05, Section 6.5.7.1 & Figure 6-4)
Kd	Directionality Factor (ASCE 7-05, Table 6-4)
V	Basic Wind Speed in MPH from User Inputs in Step 1
I	Importance Factor[2] (ASCE 7-05, Table 6-1)

Calculate the wind pressure for uplift and downforce, using GCpn & GCpp respectively, in the provided boxes.

Commentary:
2) Typical values for the Importance Factor are 0.87 based on Occupancy Category I and 1.0 based on Occupancy Category II. Occupancy I is defined by ASCE 7-05 to mean "Buildings and other structures that present a low hazard to human life in the event of failure…". Occupancy II is defined by ASCE 7-05 to mean "All buildings and other structures except those listed in Occupancy Categories I, III, and IV".

Step 3: **Dead Load**

Module Dead Load (psf):		Module Dead Load (psf) should be determined from User Inputs in Step 1
Racking System Dead Load[3] (psf):		**[See Appendix E]** (The racking system dead load should be taken as the total weight of the racking system (hardware, rails, nuts, bolts, attachments, etc.) divided by the total module area of the system.) Component weights can be found in the technical datasheets.
Total Dead Load (psf):		Sum of Module Dead Load and Racking System Dead Load

Calculated Dead Load in the provided boxes.

Step 4: **Snow Load (ASCE 7-05, Chapter 7)**

Sloped Roof Snow Load Pressure Equation:

	Ps=0.7*Cs*Ce*Ct*I*Pg (ASCE 7-05, Section 7.3)		
		Pg	Ground Snow Load[4] (psf) from User inputs in Step 1.
		Cs	Slope Factor (ASCE 7-05, Figure 7-2)
		C_t	Thermal Factor[5] (ASCE 7-05, Table 7-3)
		I	Importance Factor[6] (snow) (ASCE 7-05, Table 7-4)
		Ce	Exposure Factor (ASCE 7-05, Table 7-2)

Calculate Ps (Sloped roof snow load) in the provided boxes.

Commentary:

3) To be combined with the module dead load and used in wind load combinations.

4) The ground snow load is utlilized to calculate the roof snow load, which is the load applied to the structure.

5) From Section C7.8 of ASCE 7-05, "the collectors should be designed to sustain a load calculated by using the "unobstructed slippery surfaces" curve in Fig. 7-2a". This graph recommends the use of a Ct value of less than or equal to 1.0.

6) The Snow Importance Factor for Occupancy Category I = 0.8 and for Occupancy Category II = 1.0.

Step 5: **Seismic Load (ASCE 7-05)**

Seismic Load Equation (Horizontal):

$F_{p(horizontal)}=[(0.4*a_p*S_{DS}*Wp)/(Rp/Ip)]*(1+2*z/h)$ (ASCE 7-05, 13.3.1)

F_p need not exceed $1.6*S_{SD}*Ip*Wp$ and Fp shall not be less than $Fp=0.3*S_{DS}*Ip*Wp$

psf (seismic load (horiz.) on the module, divide Fp by the effected area)

a_p Component Amplification Factor[7] (ASCE 7-05, Table 13.6-1)

Rp Component Response Modification Factor[8] (ASCE 7-05, Table 13.6-

S_{DS} Spectral Acceleration (ASCE 7-05, Section 11.4.4) $S_{DS}=2/3*S_{MS}$

$S_{MS}=Fa*Ss$ (ASCE 7-05, Section 11.4.3)

Fa Site Coefficient (ASCE 7-05, Table 11.4-1)

Ss from User Inputs in Step 1

Wp Component operating weight (lbs) (determine by using total dead load (psf) multiplied by the effected area (SF) of the component or attachment)

Ip Seismic Importance Factor[9] (ASCE 7-05, section 13.1.3)

z Height in structure of point of attachment of component with respect to the base (ASCE 7-05, Section 13.3.1)

h average roof height of structure with respect to the base (ASCE 7-05, Section 13.3.1)

z/h need not exceed 1.0

Seismic Load Equation (Vertical):

$F_{p(vertical)}=\pm 0.2*S_{DS}*Wp$ (ASCE 7-05, Section 12.4.2.2)

psf (seismic load (vert.) on the module, divide Fp by the effected area)

Calculate seismic loads for both horizontal and vertical in the provided boxes.

Commentary:

7) The Component Amplification Factor (ap) for flush-mount systems should be taken as 1.0 (International Code Council (ICC) Acceptanc Criteria (AC) 428, Section 3.1.3.3).

8) The Component Response Modification Factor (Rp) for flush-mount systems should be taken as 1.5 (International Code Council (ICC) Acceptanc Criteria (AC) 428, Section 3.1.3.3).

9) The Seismic Importance Factor for Occupancy Categories I and II = 1.0.

Step 6: **Rewrite Your Loads**

*Depending on your coordinate system, certain loads will need to be split into their horizontal and vertical components.

Total Dead Load:		psf
Wind Pressure Up:		psf
Wind Pressure Down:		psf
Snow Load:		psf
Seismic Load Horizontal:		lbs
Seismic Load Vertical:		psf

Step 7: **Allowable Stress Design (ASD) Load Combinations (ASCE 7-05, Chapter 2, Section 2.4.1)**

*The load combinations below have been identified as the likely controlling cases for the roof structure.

1) D
2) D + Lr
3) D + S
4) D + W_{up}
5) D + W_{down}
6) D + 0.75W_{down} + 0.75S
7) D + 0.75W_{down} + 0.75Lr
8) D + 0.75(0.7E) + 0.75Lr
9) D + 0.75(0.7E) + 0.75S
10) D + 0.7E
11) 0.6D + W_{up}
12) 0.6 D + W_{down}
13) 0.6 D + 0.7E

D = Dead Load
Lr = Live Load to Roof
S = Snow Load
W_{up} = Wind Load Up
W_{down} = Wind Load Down
E = Earthquake/Seismic Load

Step 8: **Create Initial Array Layout**

a. Identify the structural supporting members of your building. A sketch/drawing of the roof/building with location of supporting members, vents, skylights, cable/wires, areas to avoid, etc., is highly recommended.

b. Create a "rough draft" layout of solar modules on the actual project roof. (Refer to the SOLARMOUNT Installation Guide.)

Step 9: **Determine a Rail Span**

*For structural engineers who would like to determine the rail span without utilizing the Prescriptive Method, section properties can be found in Appendix F - Technical Data Sheets.

a. Using information in Step 1 & 8, select a Prescriptive Pressure Table contained the Appendix B or
b. Use fill-in boxes below to document your project specific pressures and tables utilized.

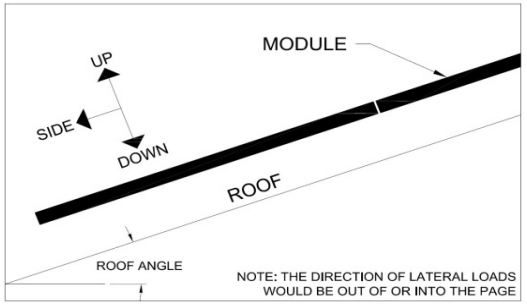

Pressure Table Used:

Basic Wind Speed -	
Building Height -	
Exposure Category -	
Lateral (Ss) -	
Roof Pitch -	
Ground Snow Load -	

Controlling Pressure:

	Up (psf)	Down (psf)	Side (psf)	Lateral (psf)
Roof zone 1:				
Roof zone 2:				
Roof zone 3:				

Note: For Low Profile Mode, where rails are perpendicular to the roof tilt (E-W Rails), "Side Load" (Down Slope) is load applied in weak axis bending of the SOLARMOUNT rail along the roof tilt and "Lateral" is load applied as an axial load along the SOLARMOUNT rail perpendicular to the roof tilt. For High Profile Mode, where rails are parallel to the roof tilt (N-S Rails), "Side Load" (Downslope) is load applied in as an axial load along the SOLARMOUNT rail perpendicular to the roof tilt and "Lateral Load" is applied in weak axis bending of the SOLARMOUNT rail along the roof tilt.

c. Convert pressures (lbs/ft² or psf) from the boxes just filled in to pounds per linear foot (lb/ft or plf) using the following steps:
   i. Pressure (from table above) * Area of Module = Total Pounds per Module
   ii. Total Pounds Per Module / 2 (Number of rails) = Pounds Per Rail
   iii. Pounds Per Rail / Width of Module Parallel with the Rail = Pounds per Linear Foot (pl
d. Use the *Downward and Upward Span Length Tables* in Appendix C with the plf loads to determine maximum spans.
   i. Using the plf loads for "Down", look up the table "Downward Span Lengths" in Appendix B and using the "Down" plf load and the "Side" plf load combinations to choose the maximum span length.
   ii. Using the plf loads for "Up", look up the table "Uplift Span Lengths" in Appendix and using the "Up" plf and "Side" plf load combinations to choose the maximum span length.
   iii. Use the smaller length of the "Down" and "Up" maximum span length.
   iv. Cantilever (overhang) lengths can be up to 33% of the span length. For example, a 9 foot span length can have a 3 foot cantilever. The cantilever is defined as the distance from the center of a L-Foot to the edge of a rail.

Step 10: **Look-up Layout and Attachment Guidelines for Array**

a. Review your layout in Step 8 above and the Layout and Attachment Guidelines to determine potential attachment points to your structure.

Step 11: **Determine Load to the Roof**

a. To determine the load on the roof through the attachment:
   i. Determine the tributary area to each attachment.
   ii. Review the controlling pressure in Step 9.
   iii. Determine pressure zones on the roof per ASCE 7-05, Figure 6-3.
   iv. Multiply the tributary area by the roof pressure to obtain loads to the roof attachment.
   v. Determine the point load to the roof at each attachment.

Step 12: **Check Roof Load**

a. Ensure that the supporting structure is capable of withstanding the additional loads imposed by the proposed solar system.

Step 13: **Check the Connections**

a. Similar to Step 9c, determine the tributary area to each connection and the applied load from the Controlling Pressures table in Step 9
b. Convert the applied psf loads into pounds through tributary area.
c. Look up the Technical Data Sheets in Appendix H for maximum permissible load to each connection.
d. From Step 11, determine if the attachment (lag bolt or other appropriate attachment) is capable of withstanding the point loads applied
e. If the maximum permissible load is greater than the applied load, then the connections are adequate.

Step 14: **Define Grounding and Bonding Path**

a. Refer to the SOLARMOUNT Installation Guide for how to determine the Grounding and Bonding Path.

Step 15: **SOLARMOUNT Front Trim Check**

a. SOLARMOUNT Front Trim should not be installed in areas where the wind load exceeds 100 psf, where the distance from clamp to clamp (span) exceeds 52 inches, or where the cantilever (overhang) is greater than 66% of the span length. Please review the Step 6 Up and Down Wind Loads (psf) to determine if Front Trim is appropriate for your project.

ASCE 7-10 Analytical Method

Step 1: **User Inputs (ASCE 7-10)**

		Notes / Clarifications:
Roof Height (ft):		Mean roof height (15 ft, 30 ft, or 60 ft)
Roof Angle (degrees):		Convert roof pitch to angle in degrees **[See Appendix D]**
Risk Category:		Table 1.5-1
Basic Wind Speed (mph):		Per Basic Wind Speeds for Risk Category II (ASCE 7-10, Figure 26.5-1A)
Wind Exposure Category:		Determine the Exposure Category (B, C or D) by using the definitions for Surface Roughness Categories (ASCE 7-10, Sections 26.7.2 and 26.7.3)
Roof Zone:		Determine the Roof Zone (1, 2 or 3) (ASCE 7-10, Figure 30.5-1)
Ground Snow Load (psf):		Pg = Ground Snow Load in psf. Ground Snow Loads (ASCE 7-10, Figure 7-1)
Seismic Coefficient Ss (g):		ASCE 7-10 (Figures 22-1, 22-3, 22-5, 22-6 and 22-17)
Roof Live Load[1] (psf):		0 psf, 20 psf, etc.
Module Manufacturer/Type:		
Solar Module Length (in):		
Solar Module Width (in):		
Solar Module Weight (lb):		
Module Dead Load (psf)		

Commentary:
1) Most Building Officials allow for all or a portion of the roofs original live load design load to be removed/reduced at the time that solar panels are being added to the roof. The rationale behind this is that live load or roof foot traffic is eliminated or reduced to designated paths. in other words, the roof top solar array and live load foot traffic cannot occupy the same space. If all of the roof live load can be utilized by the proposed solar array, 0 psf should be entered.

Step 2: **Wind Pressure (ASCE 7-10, Chapter 30)**

Wind Pressure Equation - Components & Cladding (ASCE 7-10, Section 30.4.2):

Pp=qh (GCpp-GCpi) (ASCE 7-10, Section 30.4.2) (GCpp - Positive Downforce Factor)

Pn=qh (GCpn-GCpi) (ASCE 7-10, Section 30.4.2) (GCpn - Negative Uplift Factor)

Gcpi equals zero (per AC428 - Nov, 2012) (internal pressure coefficient)

GCp is defined below (ASCE 7-10 Figure 30.4-2) and is a function of the roof zone, effective wind area (feet squared), and roof angle (degrees) (external pressure coefficient)

GCpp (Positive downforce factor)

GCpn (Negative uplift factor)

(ASCE 7-10, Figure 30.4-2A) for roof angles ≤ 7°

(ASCE 7-10, Figure 30.4-2B) for roof angles > 7° and ≤ 27°

(ASCE 7-10, Figure 30.4-2C) for roof angles > 27° and ≤ 45°

qh = qz

qz=0.00256*Kz*Kzt*Kd*V^2 (ASCE 7-10, Section 30.3.2)

Kz	Velocity Pressure Coefficient (ASCE 7-10, Table 30.3-1)
Kzt	Topographic Factor (ASCE 7-10, Section 26.8 & Figure 268-1)
Kd	Directionality Factor (ASCE 7-10, Table 26.6-1)
V	Basic Wind Speed in MPH from User Inputs in Step 1

Calculate the wind pressure for uplift and downforce, using GCpn & GCpp respectively, in the provided boxes.

Step 3: **Dead Load**

Module Dead Load (psf):		Module Dead Load (psf) should be determined from User Inputs in Step 1
Racking System Dead Load[2] (psf):		**[See Appendix E]** (The racking system dead load should be taken as the total weight of the racking system (hardware, rails, nuts, bolts, attachments, etc.) divided by the total module area of the system.)Component weights can be found in the technical datasheets
Total Dead Load (psf):		Sum of Module Dead Load and Racking System Dead Load

Calculated Dead Load in the provided boxes.

Commentary:
2) To be combined with the module dead load and used in wind load combinations.

3) The ground snow load is utlilized to calculate the roof snow load, which is the load applied to the structure.

4) The Snow Importance Factor for Occupancy Category I = 0.8 and for Occupancy Category II = 1.0.

Step 4: **Snow Load (ASCE 7-10, Chapter 7)**

Sloped Roof Snow Load Pressure Equation:

	Ps=0.7*Cs*Ce*Ct*I*Pg (ASCE 7-10, Sections 7.3 & 7.4 Flat and Sloped Roof Snow Load)		
		Pg	Ground Snow Load[3] (psf) from User inputs in Step 1.
		Cs	Slope Factor (ASCE 7-10, Figure 7-2)
		C_t	Thermal Factor (ASCE 7-10, Table 7-3)
		I	Importance Factor[4] (snow) (ASCE 7-10, Table 1.5-2)
		Ce	Exposure Factor (ASCE 7-10, Table 7-2)

Calculate Ps (Sloped roof snow load) in the provided boxes.

Step 5: **Seismic Load (ASCE 7-10)**

Seismic Load Equation (Horizontal):

$F_{p(horizontal)}$=[(0.4*a_p*S_{DS}*Wp)/(Rp/Ip)]*(1+2*z/h) (ASCE 7-10, 13.3.1)

F_p need not exceed 1.6*S_{SD}*Ip*Wp and Fp shall not be less than Fp=0.3*S_{DS}*Ip*Wp

psf (seismic load (horiz.) on the module, divide Fp by the effected area)

a_p Component Amplification Factor[5] (ASCE 7-10, Table 13.5-1)

Rp Component Response Modification Factor[6] (ASCE 7-10, Table 13.5-

S_{DS} Spectral Acceleration (ASCE 7-10, Section 11.4.4) S_{DS}=2/3*S_{MS}

S_{MS}=Fa*Ss (ASCE 7-10, Section 11.4.3)

Fa Site Coefficient (ASCE 7-10, Table 11.4-1)

Ss from User Inputs in Step 1

Wp Component operating weight (lbs) (determine by using total dead load (psf) multiplied by the effected area (SF) of the component or attachment)

Ip Seismic Importance Factor[7] (ASCE 7-10, section 1.5-2)

z Height in structure of point of attachment of component with respect to the base (ASCE 7-10, Section 13.3.1)

h Average roof height of structure with respect to the base (ASCE 7-10, Section 13.3.1)

z/h need not exceed 1.0

Seismic Load Equation (Vertical):

$F_{p(vertical)}$=±0.2*S_{DS}*Wp (ASCE 7-10, Section 12.4.2.2)

psf (seismic load (vert.) on the module, divide Fp by the effected area)

Calculate seismic loads for both horizontal and vertical in the provided boxes.

Commentary:

5) The Component Amplification Factor (ap) for flush-mount systems should be taken as 1.0 (International Code Council (ICC) Acceptanc Criteria (AC) 428, Section 3.1.3.3).

6) The Component Response Modification Factor (Rp) for flush-mount systems should be taken as 1.5 (International Code Council (ICC) Acceptanc Criteria (AC) 428, Section 3.1.3.3).

7) The Seismic Importance Factor for Occupancy Categories I and II = 1.0.

Step 6: **Rewrite Your Loads**

*Depending on your coordinate system, certain loads will need to be split into their horizontal and vertical components.

Total Dead Load:		psf
Wind Pressure Up:		psf
Wind Pressure Down:		psf
Snow Load:		psf
Seismic Load Horizontal:		lbs
Seismic Load Vertical:		psf

Step 7: **Allowable Stress Design (ASD) Load Combinations (ASCE 7-10, Chapter 2, Section 2.4.1)**

*The load combinations below have been identified as the likely controlling cases for the roof structure.

1) D
2) D + Lr
3) D + S
4) D + $0.6W_{up}$
5) D + $0.6W_{down}$
6) D + $0.75(0.6)W_{down}$ + 0.75S
7) D + $0.75(0.6)W_{down}$ + 0.75Lr
8) D + 0.75(0.7E) + 0.75Lr
9) D + 0.75(0.7E) + 0.75S
10) D + 0.7E
11) 0.6D + $0.6W_{up}$
12) 0.6 D + $0.6W_{down}$
13) 0.6 D + 0.7E

D = Dead Load
Lr = Live Load to Roof
S = Snow Load
W_{up} = Wind Load Up
W_{down} = Wind Load Down
E = Earthquake/Seismic Load

Step 8: **Create Initial Array Layout**

a. Identify the structural supporting members of your building. A sketch/drawing of the roof/building with location of supporting members, vents, skylights, cable/wires, areas to avoid, etc., is highly recommended.

b. Create a "rough draft" layout of solar modules on the actual project roof. (Refer to the SOLARMOUNT Installation Guide.)

Step 9: **Determine a Rail Span**

*For structural engineers who would like to determine the rail span without utilizing the Prescriptive Method, section properties can be found in Appendix F - Technical Data Sheets.

a. online.

b. Use fill-in boxes below to document your project specific pressures and tables utilized.

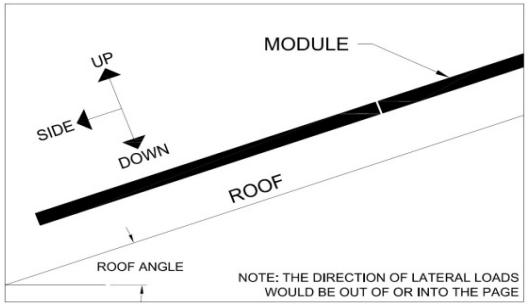

Pressure Table Used:

Basic Wind Speed -	
Building Height -	
Exposure Category -	
Lateral (Ss) -	
Roof Pitch -	
Ground Snow Load -	

Controlling Pressure:

	Up (psf)	Down (psf)	Side (psf)	Lateral (psf)
Roof zone 1:				
Roof zone 2:				
Roof zone 3:				

Note: For Low Profile Mode, where rails are perpendicular to the roof tilt (E-W Rails), "Side Load" (Down Slope) is load applied in weak axis bending of the SOLARMOUNT rail along the roof tilt and "Lateral" is load applied as an axial load along the SOLARMOUNT rail perpendicular to the roof tilt. For High Profile Mode, where rails are parallel to the roof tilt (N-S Rails), "Side Load" (Downslope) is load applied in as an axial load along the SOLARMOUNT rail perpendicular to the roof tilt and "Lateral Load" is applied in weak axis bending of the SOLARMOUNT rail along the roof tilt.

c. Convert pressures (lbs/ft² or psf) from the boxes just filled in to pounds per linear foot (lb/ft or plf) using the following steps:

i. Pressure (from table above) * Area of Module = Total Pounds per Module

ii. Total Pounds Per Module / 2 (Number of rails) = Pounds Per Rail

iii. Pounds Per Rail / Width of Module Parallel with the Rail = Pounds per Linear Foot (plf)

d. Use the *Downward and Upward Span Length Tables* in Appendix C with the plf loads to determine maximum spans.

i. Using the plf loads for "Down", look up the table "Downward Span Lengths" in the Appendix and using the "Down" plf load and the "Side" plf load combinations to choose the maximum span length.

ii. Using the plf loads for "Up", look up the table "Uplift Span Lengths" in the Appendix and using the "Up" plf and "Side" plf load combinations to choose the maximum span length.

iii. Use the smaller length of the "Down" and "Up" maximum span length.

iv. Cantilever (overhang) lengths can be up to 33% of the span length. For example, a 9 foot span length can have a 3 foot cantilever. The cantilever is defined as the distance from the center of a L-Foot to the edge of a rail.

Step 10: **Look-up Layout and Attachment Guidelines for Array**

a. Review your layout in Step 8 above and the Layout and Attachment Guidelines to determine potential attachment points to your structure.

Step 11: **Determine Load to the Roof**

a. To determine the load on the roof through the attachment:
   i. Determine the tributary area to each attachment.
   ii. Review the controlling pressure in Step 9.
   iii. Determine pressure zones on the roof per ASCE 7-10, Figure 30.5-1.
   iv. Multiply the tributary area by the roof pressure to obtain loads to the roof attachment.
   v. Determine the point load to the roof at each attachment.

Step 12: **Check Roof Load**

a. Ensure that the supporting structure is capable of withstanding the additional loads imposed by the proposed solar system.

Step 13: **Check the Connections**

a. Similar to Step 9c, determine the tributary area to each connection and the applied load from the Controlling Pressures table in Step 9
b. Convert the applied psf loads into pounds through tributary area.
c. Look up the Technical Data Sheets in Appendix G for maximum permissible load to each connection.
d. From Step 11, determine if the attachment (lag bolt or other appropriate attachment) is capable of withstanding the point loads applied
e. If the maximum permissible load is greater than the applied load, then the connections are adequate.

Step 14: **Define Grounding and Bonding Path**

a. Refer to the SOLARMOUNT Installation Guide for how to determine the Grounding and Bonding Path.

Step 15: **SOLARMOUNT Front Trim Check**

a. SOLARMOUNT Front Trim should not be installed in areas where the wind load exceeds 100 psf, where the distance from clamp to clamp (span) exceeds 52 inches, or where the cantilever (overhang) is greater than 66% of the span length. Please review the Step 6 Up and Down Wind Loads (psf) to determine if Front Trim is appropriate for your project.

Technical Support

If you have further questions regarding the SOLARMOUNT product, please contact your distributer. If further clarification is needed, please review the Unirac website online resources at:

http://unirac.com/solarmount

The Unirac website contains up-to-date manuals, design guides, webinars, online calculations, information, certification letters, technical data sheets, additional products that Unirac provides, and anything else you might need for your project.

Appendix – Table of Contents

Please refer to the **Master Price List** at www.unirac.com for a list of part numbers, part descriptions, and prices.

California (Typical)*

APPENDIX - Pressure Tables for Flush Mounted Roof Systems

7-05 ASCE

85 mph Basic Wind Speed

5 psf Ground Snow Load

SM SOLAR MOUNT

APPENDIX B

Pressure Lookup Tables

Up and Down (psf)

	Roof Pitch	Bldg. Height = 15 ft. Up Pressures (psf) Zone 1	Zone 2	Zone 3	Down (psf)	Bldg. Height = 30 ft. Up Pressures (psf) Zone 1	Zone 2	Zone 3	Down (psf)	Bldg. Height = 60 ft. Up Pressures (psf) Zone 1	Zone 2	Zone 3	Down (psf)
Exposure Category B	1:12	-9.6	-18.4	-29.4	14.7	-9.6	-18.4	-29.4	14.7	-12.0	-22.7	-36.0	14.7
	2:12	-8.6	-17.4	-27.3	14.3	-8.6	-17.4	-27.3	14.3	-10.7	-21.4	-33.4	14.3
	3:12	-8.7	-17.4	-27.3	13.9	-8.7	-17.4	-27.3	13.9	-10.7	-21.4	-33.4	13.9
	4:12	-8.7	-17.4	-27.3	13.5	-8.7	-17.4	-27.3	13.5	-10.7	-21.4	-33.4	13.5
	5:12	-8.7	-17.4	-27.3	13.2	-8.7	-17.4	-27.3	13.2	-10.8	-21.4	-33.5	13.2
	6:12	-8.8	-17.5	-27.4	13.1	-8.8	-17.5	-27.4	13.1	-10.8	-21.5	-33.5	13.1
	7:12	-9.8	-12.0	-12.0	13.0	-9.8	-12.0	-12.0	13.0	-12.2	-14.8	-14.8	15.0
	8:12	-9.9	-12.1	-12.1	12.9	-9.9	-12.1	-12.1	12.9	-12.2	-14.9	-14.9	14.9
	9:12	-9.9	-12.1	-12.1	12.8	-9.9	-12.1	-12.1	12.8	-12.3	-14.9	-14.9	14.8
	10:12	-9.9	-12.1	-12.1	12.7	-9.9	-12.1	-12.1	12.7	-12.3	-15.0	-15.0	14.7
	11:12	-10.0	-12.2	-12.2	12.6	-10.0	-12.2	-12.2	12.6	-12.3	-15.0	-15.0	14.6
	12:12	-10.0	-12.2	-12.2	12.5	-10.0	-12.2	-12.2	12.5	-12.4	-15.1	-15.1	14.5
Exposure Category C	1:12	-12.0	-22.7	-36.0	14.7	-14.0	-26.4	-41.8	14.7	-16.4	-30.6	-48.4	14.7
	2:12	-10.7	-21.4	-33.4	14.3	-12.5	-24.8	-38.7	14.3	-14.6	-28.8	-44.8	14.3
	3:12	-10.7	-21.4	-33.4	13.9	-12.5	-24.9	-38.7	13.9	-14.7	-28.9	-44.9	13.9
	4:12	-10.7	-21.4	-33.4	13.5	-12.6	-24.9	-38.8	13.5	-14.7	-28.9	-44.9	13.5
	5:12	-10.8	-21.4	-33.5	13.2	-12.6	-24.9	-38.8	13.2	-14.7	-28.9	-44.9	13.2
	6:12	-10.8	-21.5	-33.5	13.1	-12.6	-25.0	-38.8	13.1	-14.8	-29.0	-45.0	13.1
	7:12	-12.2	-14.8	-14.8	15.0	-14.2	-17.3	-17.3	16.9	-16.6	-20.1	-20.1	19.0
	8:12	-12.2	-14.9	-14.9	14.9	-14.3	-17.3	-17.3	16.8	-16.6	-20.2	-20.2	18.9
	9:12	-12.3	-14.9	-14.9	14.8	-14.3	-17.4	-17.4	16.7	-16.7	-20.2	-20.2	18.8
	10:12	-12.3	-15.0	-15.0	14.7	-14.4	-17.4	-17.4	16.6	-16.7	-20.3	-20.3	18.7
	11:12	-12.3	-15.0	-15.0	14.6	-14.4	-17.5	-17.5	16.4	-16.8	-20.3	-20.3	18.6
	12:12	-12.4	-15.1	-15.1	14.5	-14.4	-17.5	-17.5	16.3	-16.8	-20.3	-20.3	18.5
Exposure Category D	1:12	-14.8	-27.8	-44.0	14.7	-16.9	-31.5	-49.7	14.7	-19.2	-35.7	-56.3	14.7
	2:12	-13.2	-26.2	-40.7	14.3	-15.1	-29.6	-46.1	14.3	-17.2	-33.7	-52.2	14.6
	3:12	-13.2	-26.2	-40.8	13.9	-15.1	-29.7	-46.1	13.9	-17.2	-33.7	-52.2	14.2
	4:12	-13.3	-26.2	-40.8	13.5	-15.1	-29.7	-46.1	13.5	-17.2	-33.7	-52.2	13.7
	5:12	-13.3	-26.3	-40.8	13.2	-15.1	-29.7	-46.1	13.2	-17.3	-33.7	-52.3	13.5
	6:12	-13.3	-26.3	-40.9	13.1	-15.2	-29.8	-46.2	13.1	-17.3	-33.8	-52.3	13.4
	7:12	-15.0	-18.2	-18.2	17.6	-17.0	-20.7	-20.7	19.4	-19.4	-23.5	-23.5	21.6
	8:12	-15.0	-18.3	-18.3	17.5	-17.1	-20.7	-20.7	19.3	-19.5	-23.6	-23.6	21.4
	9:12	-15.1	-18.3	-18.3	17.4	-17.1	-20.8	-20.8	19.2	-19.5	-23.6	-23.6	21.3
	10:12	-15.1	-18.4	-18.4	17.3	-17.2	-20.8	-20.8	19.1	-19.5	-23.7	-23.7	21.2
	11:12	-15.2	-18.4	-18.4	17.2	-17.2	-20.9	-20.9	19.0	-19.6	-23.7	-23.7	21.1
	12:12	-15.2	-18.5	-18.5	17.0	-17.3	-20.9	-20.9	18.9	-19.6	-23.7	-23.7	21.0

Side Load (psf)

	Roof Pitch	Ss = 0.0	Ss = 0.1	Ss = 0.2	Ss = 0.3	Ss = 0.4	Ss = 0.5	Ss = 1.0	Ss = 1.25	Ss = 1.5	Ss = 2.0	Ss = 2.5	Ss = 3.1
Down Slope	1:12	0.7	0.8	0.9	1.1	1.2	1.3	1.8	2.0	2.3	2.9	3.6	4.4
	2:12	1.3	1.3	1.5	1.6	1.7	1.9	2.3	2.4	2.7	3.3	3.9	4.7
	3:12	1.9	1.9	2.0	2.1	2.2	2.3	2.7	2.9	3.1	3.7	4.2	5.0
	4:12	2.4	2.4	2.4	2.5	2.6	2.8	3.2	3.3	3.6	4.1	4.6	5.3
	5:12	2.7	2.7	2.7	2.9	3.0	3.1	3.5	3.6	3.9	4.4	4.9	5.5
	6:12	3.1	3.1	3.1	3.1	3.3	3.4	3.8	3.9	4.2	4.7	5.1	5.7
	7:12	3.3	3.3	3.3	3.4	3.5	3.6	4.0	4.1	4.4	4.9	5.3	5.9
	8:12	3.5	3.5	3.5	3.5	3.7	3.8	4.1	4.3	4.5	5.0	5.5	6.0
	9:12	3.6	3.6	3.6	3.7	3.8	3.9	4.3	4.4	4.6	5.1	5.6	6.1
	10:12	3.7	3.7	3.7	3.8	3.9	4.0	4.4	4.5	4.7	5.2	5.6	6.2
	11:12	3.8	3.8	3.8	3.9	4.0	4.1	4.4	4.5	4.8	5.2	5.7	6.2
	12:12	3.8	3.8	3.8	3.9	4.0	4.1	4.4	4.6	4.8	5.2	5.7	6.2

Lateral

Ss = 0.0	Ss = 0.1	Ss = 0.2	Ss = 0.3	Ss = 0.4	Ss = 0.5	Ss = 1.0	Ss = 1.25	Ss = 1.5	Ss = 2.0	Ss = 2.5	Ss = 3.1
0.0	0.2	0.4	0.6	0.8	0.9	1.4	1.6	2.0	2.6	3.3	4.0

* These tables are meant as representative of the areas listed in the title. The local wind speeds and snow loads should be independantly verifed for the specific install location.

Southwest (Typical)*

APPENDIX - Pressure Tables for Flush Mounted Roof Systems

7-05 ASCE

90 mph Basic Wind Speed

5 psf Ground Snow Load

SM SOLAR MOUNT

APPENDIX B

Pressure Lookup Tables

Up and Down (psf)

	Roof Pitch	Bldg. Height = 15 ft. Up Pressures (psf) Zone 1	Zone 2	Zone 3	Down (psf)	Bldg. Height = 30 ft. Up Pressures (psf) Zone 1	Zone 2	Zone 3	Down (psf)	Bldg. Height = 60 ft. Up Pressures (psf) Zone 1	Zone 2	Zone 3	Down (psf)
Exposure Category B	1:12	-11.0	-20.8	-33.2	14.7	-11.0	-20.8	-33.2	14.7	-13.6	-25.6	-40.6	14.7
	2:12	-9.7	-19.6	-30.7	14.3	-9.7	-19.6	-30.7	14.3	-12.1	-24.1	-37.6	14.3
	3:12	-9.8	-19.6	-30.7	13.9	-9.8	-19.6	-30.7	13.9	-12.1	-24.1	-37.6	13.9
	4:12	-9.8	-19.7	-30.8	13.5	-9.8	-19.7	-30.8	13.5	-12.2	-24.2	-37.6	13.5
	5:12	-9.8	-19.7	-30.8	13.2	-9.8	-19.7	-30.8	13.2	-12.2	-24.2	-37.7	13.2
	6:12	-9.9	-19.7	-30.8	13.1	-9.9	-19.7	-30.8	13.1	-12.3	-24.2	-37.7	13.1
	7:12	-11.1	-13.6	-13.6	14.1	-11.1	-13.6	-13.6	14.1	-13.8	-16.8	-16.8	16.5
	8:12	-11.2	-13.7	-13.7	14.0	-11.2	-13.7	-13.7	14.0	-13.8	-16.8	-16.8	16.4
	9:12	-11.2	-13.7	-13.7	13.9	-11.2	-13.7	-13.7	13.9	-13.9	-16.9	-16.9	16.3
	10:12	-11.3	-13.7	-13.7	13.8	-11.3	-13.7	-13.7	13.8	-13.9	-16.9	-16.9	16.2
	11:12	-11.3	-13.8	-13.8	13.7	-11.3	-13.8	-13.8	13.7	-14.0	-17.0	-17.0	16.1
	12:12	-11.4	-13.8	-13.8	13.6	-11.4	-13.8	-13.8	13.6	-14.0	-17.0	-17.0	16.0
Exposure Category C	1:12	-13.6	-25.6	-40.6	14.7	-15.9	-29.7	-47.0	14.7	-18.5	-34.5	-54.4	14.7
	2:12	-12.1	-24.1	-37.6	14.3	-14.2	-28.0	-43.6	14.3	-16.6	-32.5	-50.4	14.3
	3:12	-12.1	-24.1	-37.6	13.9	-14.2	-28.0	-43.6	13.9	-16.6	-32.5	-50.4	13.9
	4:12	-12.2	-24.2	-37.6	13.5	-14.2	-28.1	-43.6	13.5	-16.6	-32.6	-50.5	13.5
	5:12	-12.2	-24.2	-37.7	13.2	-14.3	-28.1	-43.6	13.2	-16.7	-32.6	-50.5	13.2
	6:12	-12.3	-24.2	-37.7	13.1	-14.3	-28.1	-43.7	13.1	-16.7	-32.6	-50.6	13.1
	7:12	-13.8	-16.8	-16.8	16.5	-16.1	-19.5	-19.5	18.6	-18.7	-22.7	-22.7	20.9
	8:12	-13.8	-16.8	-16.8	16.4	-16.1	-19.6	-19.6	18.5	-18.8	-22.8	-22.8	20.8
	9:12	-13.9	-16.9	-16.9	16.3	-16.2	-19.6	-19.6	18.3	-18.8	-22.8	-22.8	20.7
	10:12	-13.9	-16.9	-16.9	16.2	-16.2	-19.7	-19.7	18.2	-18.9	-22.8	-22.8	20.6
	11:12	-14.0	-17.0	-17.0	16.1	-16.3	-19.7	-19.7	18.1	-18.9	-22.9	-22.9	20.5
	12:12	-14.0	-17.0	-17.0	16.0	-16.3	-19.8	-19.8	18.0	-18.9	-22.9	-22.9	20.4
Exposure Category D	1:12	-16.8	-31.3	-49.5	14.7	-19.1	-35.4	-55.9	14.7	-21.7	-40.2	-63.3	14.7
	2:12	-15.0	-29.5	-45.8	14.3	-17.0	-33.4	-51.8	14.5	-19.4	-37.9	-58.7	15.5
	3:12	-15.0	-29.5	-45.9	13.9	-17.1	-33.4	-51.8	14.1	-19.4	-37.9	-58.7	15.1
	4:12	-15.0	-29.6	-45.9	13.5	-17.1	-33.5	-51.9	13.7	-19.5	-37.9	-58.7	14.9
	5:12	-15.1	-29.6	-45.9	13.2	-17.1	-33.5	-51.9	13.5	-19.5	-38.0	-58.8	14.8
	6:12	-15.1	-29.6	-46.0	13.1	-17.2	-33.5	-51.9	13.4	-19.6	-38.0	-58.8	14.7
	7:12	-17.0	-20.6	-20.6	19.4	-19.3	-23.3	-23.3	21.4	-21.9	-26.5	-26.5	23.8
	8:12	-17.0	-20.6	-20.6	19.2	-19.3	-23.4	-23.4	21.3	-21.9	-26.6	-26.6	23.7
	9:12	-17.1	-20.7	-20.7	19.1	-19.3	-23.4	-23.4	21.2	-22.0	-26.6	-26.6	23.6
	10:12	-17.1	-20.7	-20.7	19.0	-19.4	-23.5	-23.5	21.1	-22.0	-26.7	-26.7	23.5
	11:12	-17.1	-20.8	-20.8	18.9	-19.4	-23.5	-23.5	21.0	-22.1	-26.7	-26.7	23.4
	12:12	-17.2	-20.8	-20.8	18.8	-19.5	-23.6	-23.6	20.9	-22.1	-26.7	-26.7	23.3

Side Load (psf)

	Roof Pitch	Ss = 0.0	Ss = 0.1	Ss = 0.2	Ss = 0.3	Ss = 0.4	Ss = 0.5	Ss = 1.0	Ss = 1.25	Ss = 1.5	Ss = 2.0	Ss = 2.5	Ss = 3.1
Down Slope	1:12	0.7	0.8	0.9	1.1	1.2	1.3	1.8	2.0	2.3	2.9	3.6	4.4
	2:12	1.3	1.3	1.5	1.6	1.7	1.9	2.3	2.4	2.7	3.3	3.9	4.7
	3:12	1.9	1.9	2.0	2.1	2.2	2.3	2.7	2.9	3.1	3.7	4.2	5.0
	4:12	2.4	2.4	2.4	2.5	2.6	2.8	3.2	3.3	3.6	4.1	4.6	5.3
	5:12	2.7	2.7	2.7	2.9	3.0	3.1	3.5	3.6	3.9	4.4	4.9	5.5
	6:12	3.1	3.1	3.1	3.1	3.3	3.4	3.8	3.9	4.2	4.7	5.1	5.7
	7:12	3.3	3.3	3.3	3.4	3.5	3.6	4.0	4.1	4.4	4.9	5.3	5.9
	8:12	3.5	3.5	3.5	3.5	3.7	3.8	4.1	4.3	4.5	5.0	5.5	6.0
	9:12	3.6	3.6	3.6	3.7	3.8	3.9	4.3	4.4	4.6	5.1	5.6	6.1
	10:12	3.7	3.7	3.7	3.8	3.9	4.0	4.4	4.5	4.7	5.2	5.6	6.2
	11:12	3.8	3.8	3.8	3.9	4.0	4.1	4.4	4.5	4.8	5.2	5.7	6.2
	12:12	3.8	3.8	3.8	3.9	4.0	4.1	4.4	4.6	4.8	5.2	5.7	6.2

Lateral

Ss = 0.0	Ss = 0.1	Ss = 0.2	Ss = 0.3	Ss = 0.4	Ss = 0.5	Ss = 1.0	Ss = 1.25	Ss = 1.5	Ss = 2.0	Ss = 2.5	Ss = 3.1
0.0	0.2	0.4	0.6	0.8	0.9	1.4	1.6	2.0	2.6	3.3	4.0

* These tables are meant as representative of the areas listed in the title. The local wind speeds and snow loads should be independantly verifed for the specific install location.

Mid US (Medium Snow)*

APPENDIX - Pressure Tables for Flush Mounted Roof Systems

7-05 ASCE

90 mph Basic Wind Speed

25 psf Ground Snow Load

SM SOLAR MOUNT

APPENDIX B

Pressure Lookup Tables

Up and Down (psf)

	Roof Pitch	Bldg. Height = 15 ft. Up Pressures (psf) Zone 1	Zone 2	Zone 3	Down (psf)	Bldg. Height = 30 ft. Up Pressures (psf) Zone 1	Zone 2	Zone 3	Down (psf)	Bldg. Height = 60 ft. Up Pressures (psf) Zone 1	Zone 2	Zone 3	Down (psf)
Exposure Category B	1:12	-11.0	-20.8	-33.2	25.9	-11.0	-20.8	-33.2	25.9	-13.6	-25.6	-40.6	25.9
	2:12	-9.7	-19.6	-30.7	24.5	-9.7	-19.6	-30.7	24.5	-12.1	-24.1	-37.6	24.5
	3:12	-9.8	-19.6	-30.7	23.0	-9.8	-19.6	-30.7	23.0	-12.1	-24.1	-37.6	23.0
	4:12	-9.8	-19.7	-30.8	21.5	-9.8	-19.7	-30.8	21.5	-12.2	-24.2	-37.6	21.5
	5:12	-9.8	-19.7	-30.8	20.0	-9.8	-19.7	-30.8	20.0	-12.2	-24.2	-37.7	20.0
	6:12	-9.9	-19.7	-30.8	18.6	-9.9	-19.7	-30.8	18.6	-12.3	-24.2	-37.7	18.6
	7:12	-11.1	-13.6	-13.6	18.2	-11.1	-13.6	-13.6	18.2	-13.8	-16.8	-16.8	20.0
	8:12	-11.2	-13.7	-13.7	17.0	-11.2	-13.7	-13.7	17.0	-13.8	-16.8	-16.8	18.8
	9:12	-11.2	-13.7	-13.7	16.0	-11.2	-13.7	-13.7	16.0	-13.9	-16.9	-16.9	17.8
	10:12	-11.3	-13.7	-13.7	15.1	-11.3	-13.7	-13.7	15.1	-13.9	-16.9	-16.9	16.9
	11:12	-11.3	-13.8	-13.8	14.4	-11.3	-13.8	-13.8	14.4	-14.0	-17.0	-17.0	16.1
	12:12	-11.4	-13.8	-13.8	13.7	-11.4	-13.8	-13.8	13.7	-14.0	-17.0	-17.0	16.0
Exposure Category C	1:12	-13.6	-25.6	-40.6	25.9	-15.9	-29.7	-47.0	25.9	-18.5	-34.5	-54.4	25.9
	2:12	-12.1	-24.1	-37.6	24.5	-14.2	-28.0	-43.6	24.5	-16.6	-32.5	-50.4	24.5
	3:12	-12.1	-24.1	-37.6	23.0	-14.2	-28.0	-43.6	23.0	-16.6	-32.5	-50.4	23.0
	4:12	-12.2	-24.2	-37.6	21.5	-14.2	-28.1	-43.6	21.5	-16.6	-32.6	-50.5	21.5
	5:12	-12.2	-24.2	-37.7	20.0	-14.3	-28.1	-43.6	20.0	-16.7	-32.6	-50.5	20.0
	6:12	-12.3	-24.2	-37.7	18.6	-14.3	-28.1	-43.7	18.6	-16.7	-32.6	-50.6	18.6
	7:12	-13.8	-16.8	-16.8	20.0	-16.1	-19.5	-19.5	21.5	-18.7	-22.7	-22.7	23.3
	8:12	-13.8	-16.8	-16.8	18.8	-16.1	-19.6	-19.6	20.4	-18.8	-22.8	-22.8	22.2
	9:12	-13.9	-16.9	-16.9	17.8	-16.2	-19.6	-19.6	19.4	-18.8	-22.8	-22.8	21.1
	10:12	-13.9	-16.9	-16.9	16.9	-16.2	-19.7	-19.7	18.5	-18.9	-22.8	-22.8	20.6
	11:12	-14.0	-17.0	-17.0	16.1	-16.3	-19.7	-19.7	18.1	-18.9	-22.9	-22.9	20.5
	12:12	-14.0	-17.0	-17.0	16.0	-16.3	-19.8	-19.8	18.0	-18.9	-22.9	-22.9	20.4
Exposure Category D	1:12	-16.8	-31.3	-49.5	25.9	-19.1	-35.4	-55.9	25.9	-21.7	-40.2	-63.3	25.9
	2:12	-15.0	-29.5	-45.8	24.5	-17.0	-33.4	-51.8	24.7	-19.4	-37.9	-58.7	25.7
	3:12	-15.0	-29.5	-45.9	23.0	-17.1	-33.4	-51.8	23.2	-19.4	-37.9	-58.7	24.2
	4:12	-15.0	-29.6	-45.9	21.5	-17.1	-33.5	-51.9	21.7	-19.5	-37.9	-58.7	22.7
	5:12	-15.1	-29.6	-45.9	20.0	-17.1	-33.5	-51.9	20.2	-19.5	-38.0	-58.8	21.2
	6:12	-15.1	-29.6	-46.0	18.6	-17.2	-33.5	-51.9	18.8	-19.6	-38.0	-58.8	19.8
	7:12	-17.0	-20.6	-20.6	22.1	-19.3	-23.3	-23.3	23.7	-21.9	-26.5	-26.5	25.4
	8:12	-17.0	-20.6	-20.6	21.0	-19.3	-23.4	-23.4	22.5	-21.9	-26.6	-26.6	24.3
	9:12	-17.1	-20.7	-20.7	19.9	-19.3	-23.4	-23.4	21.5	-22.0	-26.6	-26.6	23.6
	10:12	-17.1	-20.7	-20.7	19.1	-19.4	-23.5	-23.5	21.1	-22.0	-26.7	-26.7	23.5
	11:12	-17.1	-20.8	-20.8	18.9	-19.4	-23.5	-23.5	21.0	-22.1	-26.7	-26.7	23.4
	12:12	-17.2	-20.8	-20.8	18.8	-19.5	-23.6	-23.6	20.9	-22.1	-26.7	-26.7	23.3

Side Load (psf)

Down Slope	Roof Pitch	Ss = 0.0	Ss = 0.1	Ss = 0.2	Ss = 0.3	Ss = 0.4	Ss = 0.5	Ss = 1.0	Ss = 1.25	Ss = 1.5	Ss = 2.0	Ss = 2.5	Ss = 3.1
	1:12	2.0	2.0	2.0	2.0	2.1	2.2	2.6	2.8	3.0	3.5	4.0	4.6
	2:12	3.6	3.6	3.6	3.6	3.6	3.6	4.0	4.1	4.4	4.9	5.4	6.0
	3:12	5.0	5.0	5.0	5.0	5.0	5.0	5.1	5.2	5.5	6.0	6.5	7.1
	4:12	6.1	6.1	6.1	6.1	6.1	6.1	6.1	6.1	6.4	6.9	7.4	8.0
	5:12	7.0	7.0	7.0	7.0	7.0	7.0	7.0	7.0	7.0	7.5	8.0	8.6
	6:12	7.5	7.5	7.5	7.5	7.5	7.5	7.5	7.5	7.5	8.0	8.5	9.1
	7:12	7.9	7.9	7.9	7.9	7.9	7.9	7.9	7.9	7.9	8.3	8.8	9.4
	8:12	8.1	8.1	8.1	8.1	8.1	8.1	8.1	8.1	8.1	8.5	9.0	9.5
	9:12	8.2	8.2	8.2	8.2	8.2	8.2	8.2	8.2	8.2	8.5	9.0	9.6
	10:12	8.2	8.2	8.2	8.2	8.2	8.2	8.2	8.2	8.2	8.5	9.0	9.5
	11:12	8.1	8.1	8.1	8.1	8.1	8.1	8.1	8.1	8.1	8.4	8.9	9.4
	12:12	7.9	7.9	7.9	7.9	7.9	7.9	7.9	7.9	7.9	8.3	8.7	9.2

Lateral

Ss = 0.0	Ss = 0.1	Ss = 0.2	Ss = 0.3	Ss = 0.4	Ss = 0.5	Ss = 1.0	Ss = 1.25	Ss = 1.5	Ss = 2.0	Ss = 2.5	Ss = 3.1
0.0	0.2	0.4	0.6	0.8	0.9	1.4	1.6	2.0	2.6	3.3	4.0

* These tables are meant as representative of the areas listed in the title. The local wind speeds and snow loads should be independantly verified for the specific install location.

Massachusetts (Typical)*

APPENDIX - Pressure Tables for Flush Mounted Roof Systems

7-05 ASCE

90 mph Basic Wind Speed

40 psf Ground Snow Load

SM SOLAR MOUNT

APPENDIX B

Pressure Lookup Tables

Up and Down (psf)

	Roof Pitch	Bldg. Height = 15 ft. Up Pressures (psf) Zone 1	Zone 2	Zone 3	Down (psf)	Bldg. Height = 30 ft. Up Pressures (psf) Zone 1	Zone 2	Zone 3	Down (psf)	Bldg. Height = 60 ft. Up Pressures (psf) Zone 1	Zone 2	Zone 3	Down (psf)
Exposure Category B	1:12	-11.0	-20.8	-33.2	31.8	-11.0	-20.8	-33.2	31.8	-13.6	-25.6	-40.6	31.8
	2:12	-9.7	-19.6	-30.7	30.0	-9.7	-19.6	-30.7	30.0	-12.1	-24.1	-37.6	30.0
	3:12	-9.8	-19.6	-30.7	27.9	-9.8	-19.6	-30.7	27.9	-12.1	-24.1	-37.6	27.9
	4:12	-9.8	-19.7	-30.8	25.8	-9.8	-19.7	-30.8	25.8	-12.2	-24.2	-37.6	25.8
	5:12	-9.8	-19.7	-30.8	23.8	-9.8	-19.7	-30.8	23.8	-12.2	-24.2	-37.7	23.8
	6:12	-9.9	-19.7	-30.8	21.9	-9.9	-19.7	-30.8	21.9	-12.3	-24.2	-37.7	21.9
	7:12	-11.1	-13.6	-13.6	20.9	-11.1	-13.6	-13.6	20.9	-13.8	-16.8	-16.8	22.7
	8:12	-11.2	-13.7	-13.7	19.4	-11.2	-13.7	-13.7	19.4	-13.8	-16.8	-16.8	21.1
	9:12	-11.2	-13.7	-13.7	18.0	-11.2	-13.7	-13.7	18.0	-13.9	-16.9	-16.9	19.8
	10:12	-11.3	-13.7	-13.7	16.8	-11.3	-13.7	-13.7	16.8	-13.9	-16.9	-16.9	18.6
	11:12	-11.3	-13.8	-13.8	15.7	-11.3	-13.8	-13.8	15.7	-14.0	-17.0	-17.0	17.5
	12:12	-11.4	-13.8	-13.8	14.8	-11.4	-13.8	-13.8	14.8	-14.0	-17.0	-17.0	16.6
Exposure Category C	1:12	-13.6	-25.6	-40.6	31.8	-15.9	-29.7	-47.0	31.8	-18.5	-34.5	-54.4	31.8
	2:12	-12.1	-24.1	-37.6	30.0	-14.2	-28.0	-43.6	30.0	-16.6	-32.5	-50.4	30.0
	3:12	-12.1	-24.1	-37.6	27.9	-14.2	-28.0	-43.6	27.9	-16.6	-32.5	-50.4	27.9
	4:12	-12.2	-24.2	-37.6	25.8	-14.2	-28.1	-43.6	25.8	-16.6	-32.6	-50.5	25.8
	5:12	-12.2	-24.2	-37.7	23.8	-14.3	-28.1	-43.6	23.8	-16.7	-32.6	-50.5	23.8
	6:12	-12.3	-24.2	-37.7	21.9	-14.3	-28.1	-43.7	21.9	-16.7	-32.6	-50.6	21.9
	7:12	-13.8	-16.8	-16.8	22.7	-16.1	-19.5	-19.5	24.3	-18.7	-22.7	-22.7	26.0
	8:12	-13.8	-16.8	-16.8	21.1	-16.1	-19.6	-19.6	22.7	-18.8	-22.8	-22.8	24.5
	9:12	-13.9	-16.9	-16.9	19.8	-16.2	-19.6	-19.6	21.3	-18.8	-22.8	-22.8	23.1
	10:12	-13.9	-16.9	-16.9	18.6	-16.2	-19.7	-19.7	20.1	-18.9	-22.8	-22.8	21.9
	11:12	-14.0	-17.0	-17.0	17.5	-16.3	-19.7	-19.7	19.1	-18.9	-22.9	-22.9	20.8
	12:12	-14.0	-17.0	-17.0	16.6	-16.3	-19.8	-19.8	18.2	-18.9	-22.9	-22.9	20.4
Exposure Category D	1:12	-16.8	-31.3	-49.5	29.8	-19.1	-35.4	-55.9	29.8	-21.7	-40.2	-63.3	29.8
	2:12	-15.0	-29.5	-45.8	28.1	-17.0	-33.4	-51.8	28.2	-19.4	-37.9	-58.7	29.2
	3:12	-15.0	-29.5	-45.9	26.2	-17.1	-33.4	-51.8	26.4	-19.4	-37.9	-58.7	27.4
	4:12	-15.0	-29.6	-45.9	24.3	-17.1	-33.5	-51.9	24.5	-19.5	-37.9	-58.7	25.5
	5:12	-15.1	-29.6	-45.9	22.5	-17.1	-33.5	-51.9	22.6	-19.5	-38.0	-58.8	23.6
	6:12	-15.1	-29.6	-46.0	20.7	-17.2	-33.5	-51.9	20.9	-19.6	-38.0	-58.8	21.9
	7:12	-17.0	-20.6	-20.6	23.9	-19.3	-23.3	-23.3	25.4	-21.9	-26.5	-26.5	27.2
	8:12	-17.0	-20.6	-20.6	22.5	-19.3	-23.4	-23.4	24.0	-21.9	-26.6	-26.6	25.8
	9:12	-17.1	-20.7	-20.7	21.2	-19.3	-23.4	-23.4	22.8	-22.0	-26.6	-26.6	24.5
	10:12	-17.1	-20.7	-20.7	20.1	-19.4	-23.5	-23.5	21.7	-22.0	-26.7	-26.7	23.5
	11:12	-17.1	-20.8	-20.8	19.2	-19.4	-23.5	-23.5	21.0	-22.1	-26.7	-26.7	23.4
	12:12	-17.2	-20.8	-20.8	18.8	-19.5	-23.6	-23.6	20.9	-22.1	-26.7	-26.7	23.3

Side Load (psf)

	Roof Pitch	Ss = 0.0	Ss = 0.1	Ss = 0.2	Ss = 0.3	Ss = 0.4	Ss = 0.5	Ss = 1.0	Ss = 1.25	Ss = 1.5	Ss = 2.0	Ss = 2.5	Ss = 3.1
Down Slope	1:12	2.6	2.6	2.6	2.6	2.6	2.7	3.1	3.3	3.5	4.0	4.5	5.1
	2:12	4.9	4.9	4.9	4.9	4.9	4.9	4.9	5.0	5.3	5.8	6.3	6.9
	3:12	6.7	6.7	6.7	6.7	6.7	6.7	6.7	6.7	6.7	7.3	7.8	8.4
	4:12	8.1	8.1	8.1	8.1	8.1	8.1	8.1	8.1	8.1	8.4	8.9	9.5
	5:12	9.2	9.2	9.2	9.2	9.2	9.2	9.2	9.2	9.2	9.2	9.7	10.3
	6:12	9.9	9.9	9.9	9.9	9.9	9.9	9.9	9.9	9.9	9.9	10.3	10.9
	7:12	10.4	10.4	10.4	10.4	10.4	10.4	10.4	10.4	10.4	10.4	10.7	11.2
	8:12	10.6	10.6	10.6	10.6	10.6	10.6	10.6	10.6	10.6	10.6	10.8	11.4
	9:12	10.7	10.7	10.7	10.7	10.7	10.7	10.7	10.7	10.7	10.7	10.8	11.4
	10:12	10.6	10.6	10.6	10.6	10.6	10.6	10.6	10.6	10.6	10.6	10.8	11.3
	11:12	10.4	10.4	10.4	10.4	10.4	10.4	10.4	10.4	10.4	10.4	10.6	11.1
	12:12	10.1	10.1	10.1	10.1	10.1	10.1	10.1	10.1	10.1	10.1	10.3	10.9

Lateral

Ss = 0.0	Ss = 0.1	Ss = 0.2	Ss = 0.3	Ss = 0.4	Ss = 0.5	Ss = 1.0	Ss = 1.25	Ss = 1.5	Ss = 2.0	Ss = 2.5	Ss = 3.1
0.0	0.2	0.4	0.6	0.8	0.9	1.4	1.6	2.0	2.6	3.3	4.0

* These tables are meant as representative of the areas listed in the title. The local wind speeds and snow loads should be independantly verifed for the specific install location.

SM SOLAR MOUNT

APPENDIX B

Pressure Lookup Tables

Mid US (High Snow)*

APPENDIX - Pressure Tables for Flush Mounted Roof Systems

7-05 ASCE

90 mph Basic Wind Speed

60 psf Ground Snow Load

Up and Down (psf)

	Roof Pitch	Bldg. Height = 15 ft. Up Pressures (psf) Zone 1	Zone 2	Zone 3	Down (psf)	Bldg. Height = 30 ft. Up Pressures (psf) Zone 1	Zone 2	Zone 3	Down (psf)	Bldg. Height = 60 ft. Up Pressures (psf) Zone 1	Zone 2	Zone 3	Down (psf)
Exposure Category B	1:12	-11.0	-20.8	-33.2	45.2	-11.0	-20.8	-33.2	45.2	-13.6	-25.6	-40.6	45.2
	2:12	-9.7	-19.6	-30.7	41.5	-9.7	-19.6	-30.7	41.5	-12.1	-24.1	-37.6	41.5
	3:12	-9.8	-19.6	-30.7	37.4	-9.8	-19.6	-30.7	37.4	-12.1	-24.1	-37.6	37.4
	4:12	-9.8	-19.7	-30.8	33.3	-9.8	-19.7	-30.8	33.3	-12.2	-24.2	-37.6	33.3
	5:12	-9.8	-19.7	-30.8	30.3	-9.8	-19.7	-30.8	30.3	-12.2	-24.2	-37.7	30.3
	6:12	-9.9	-19.7	-30.8	27.5	-9.9	-19.7	-30.8	27.5	-12.3	-24.2	-37.7	27.5
	7:12	-11.1	-13.6	-13.6	25.7	-11.1	-13.6	-13.6	25.7	-13.8	-16.8	-16.8	27.5
	8:12	-11.2	-13.7	-13.7	23.4	-11.2	-13.7	-13.7	23.4	-13.8	-16.8	-16.8	25.2
	9:12	-11.2	-13.7	-13.7	21.4	-11.2	-13.7	-13.7	21.4	-13.9	-16.9	-16.9	23.2
	10:12	-11.3	-13.7	-13.7	19.7	-11.3	-13.7	-13.7	19.7	-13.9	-16.9	-16.9	21.4
	11:12	-11.3	-13.8	-13.8	18.1	-11.3	-13.8	-13.8	18.1	-14.0	-17.0	-17.0	19.9
	12:12	-11.4	-13.8	-13.8	16.9	-11.4	-13.8	-13.8	16.9	-14.0	-17.0	-17.0	18.6
Exposure Category C	1:12	-13.6	-25.6	-40.6	45.2	-15.9	-29.7	-47.0	45.2	-18.5	-34.5	-54.4	45.2
	2:12	-12.1	-24.1	-37.6	41.5	-14.2	-28.0	-43.6	41.5	-16.6	-32.5	-50.4	41.5
	3:12	-12.1	-24.1	-37.6	37.4	-14.2	-28.0	-43.6	37.4	-16.6	-32.5	-50.4	37.4
	4:12	-12.2	-24.2	-37.6	33.3	-14.2	-28.1	-43.6	33.3	-16.6	-32.6	-50.5	33.3
	5:12	-12.2	-24.2	-37.7	30.3	-14.3	-28.1	-43.6	30.3	-16.7	-32.6	-50.5	30.3
	6:12	-12.3	-24.2	-37.7	27.5	-14.3	-28.1	-43.7	27.5	-16.7	-32.6	-50.6	27.5
	7:12	-13.8	-16.8	-16.8	27.5	-16.1	-19.5	-19.5	29.1	-18.7	-22.7	-22.7	30.8
	8:12	-13.8	-16.8	-16.8	25.2	-16.1	-19.6	-19.6	26.8	-18.8	-22.8	-22.8	28.5
	9:12	-13.9	-16.9	-16.9	23.2	-16.2	-19.6	-19.6	24.7	-18.8	-22.8	-22.8	26.5
	10:12	-13.9	-16.9	-16.9	21.4	-16.2	-19.7	-19.7	23.0	-18.9	-22.8	-22.8	24.8
	11:12	-14.0	-17.0	-17.0	19.9	-16.3	-19.7	-19.7	21.5	-18.9	-22.9	-22.9	23.3
	12:12	-14.0	-17.0	-17.0	18.6	-16.3	-19.8	-19.8	20.2	-18.9	-22.9	-22.9	22.0
Exposure Category D	1:12	-16.8	-31.3	-49.5	41.0	-19.1	-35.4	-55.9	41.0	-21.7	-40.2	-63.3	41.0
	2:12	-15.0	-29.5	-45.8	37.7	-17.0	-33.4	-51.8	37.7	-19.4	-37.9	-58.7	37.8
	3:12	-15.0	-29.5	-45.9	34.0	-17.1	-33.4	-51.8	34.0	-19.4	-37.9	-58.7	35.0
	4:12	-15.0	-29.6	-45.9	31.1	-17.1	-33.5	-51.9	31.2	-19.5	-37.9	-58.7	32.2
	5:12	-15.1	-29.6	-45.9	28.3	-17.1	-33.5	-51.9	28.5	-19.5	-38.0	-58.8	29.5
	6:12	-15.1	-29.6	-46.0	25.8	-17.2	-33.5	-51.9	26.0	-19.6	-38.0	-58.8	26.9
	7:12	-17.0	-20.6	-20.6	28.2	-19.3	-23.3	-23.3	29.8	-21.9	-26.5	-26.5	31.5
	8:12	-17.0	-20.6	-20.6	26.1	-19.3	-23.4	-23.4	27.7	-21.9	-26.6	-26.6	29.5
	9:12	-17.1	-20.7	-20.7	24.3	-19.3	-23.4	-23.4	25.8	-22.0	-26.6	-26.6	27.6
	10:12	-17.1	-20.7	-20.7	22.7	-19.4	-23.5	-23.5	24.3	-22.0	-26.7	-26.7	26.0
	11:12	-17.1	-20.8	-20.8	21.3	-19.4	-23.5	-23.5	22.9	-22.1	-26.7	-26.7	24.7
	12:12	-17.2	-20.8	-20.8	20.2	-19.5	-23.6	-23.6	21.7	-22.1	-26.7	-26.7	23.5

Side Load (psf)

	Roof Pitch	Ss = 0.0	Ss = 0.1	Ss = 0.2	Ss = 0.3	Ss = 0.4	Ss = 0.5	Ss = 1.0	Ss = 1.25	Ss = 1.5	Ss = 2.0	Ss = 2.5	Ss = 3.1
Down Slope	1:12	3.8	3.8	4.0	4.5	4.9	5.3	6.6	7.1	8.0	9.7	11.6	14.3
	2:12	7.0	7.0	7.0	7.0	7.3	7.7	9.0	9.5	10.3	11.9	13.5	15.5
	3:12	9.6	9.6	9.6	9.6	9.6	9.6	10.8	11.3	12.1	13.6	15.2	17.0
	4:12	11.6	11.6	11.6	11.6	11.6	11.6	12.2	12.7	13.4	14.9	16.3	18.1
	5:12	13.1	13.1	13.1	13.1	13.1	13.1	13.2	13.6	14.3	15.7	17.0	18.7
	6:12	14.1	14.1	14.1	14.1	14.1	14.1	14.1	14.2	14.8	16.1	17.4	18.9
	7:12	14.7	14.7	14.7	14.7	14.7	14.7	14.7	14.7	15.1	16.3	17.4	18.9
	8:12	15.0	15.0	15.0	15.0	15.0	15.0	15.0	15.0	15.0	16.2	17.3	18.6
	9:12	14.9	14.9	14.9	14.9	14.9	14.9	14.9	14.9	14.9	15.9	16.9	18.1
	10:12	14.7	14.7	14.7	14.7	14.7	14.7	14.7	14.7	14.7	15.5	16.4	17.6
	11:12	14.4	14.4	14.4	14.4	14.4	14.4	14.4	14.4	14.4	14.9	15.8	16.9
	12:12	13.9	13.9	13.9	13.9	13.9	13.9	13.9	13.9	13.9	14.4	15.2	16.2

Lateral

Ss = 0.0	Ss = 0.1	Ss = 0.2	Ss = 0.3	Ss = 0.4	Ss = 0.5	Ss = 1.0	Ss = 1.25	Ss = 1.5	Ss = 2.0	Ss = 2.5	Ss = 3.1
0.0	0.7	1.4	2.1	2.6	3.1	4.9	5.6	6.7	8.9	11.1	13.8

* These tables are meant as representative of the areas listed in the title. The local wind speeds and snow loads should be independantly verifed for the specific install location.

East Coast (Medium Snow)*

APPENDIX - Pressure Tables for Flush Mounted Roof Systems

7-05 ASCE

100 mph Basic Wind Speed

25 psf Ground Snow Load

SM SOLAR MOUNT

APPENDIX B

Pressure Lookup Tables

Up and Down (psf)

	Roof Pitch	Bldg. Height = 15 ft. Up Pressures (psf) Zone 1	Zone 2	Zone 3	Down (psf)	Bldg. Height = 30 ft. Up Pressures (psf) Zone 1	Zone 2	Zone 3	Down (psf)	Bldg. Height = 60 ft. Up Pressures (psf) Zone 1	Zone 2	Zone 3	Down (psf)
Exposure Category B	1:12	-13.9	-26.0	-41.3	25.9	-13.9	-26.0	-41.3	25.9	-17.1	-31.9	-50.4	25.9
	2:12	-12.4	-24.5	-38.2	24.5	-12.4	-24.5	-38.2	24.5	-15.3	-30.1	-46.7	24.5
	3:12	-12.4	-24.6	-38.3	23.0	-12.4	-24.6	-38.3	23.0	-15.3	-30.1	-46.8	23.0
	4:12	-12.4	-24.6	-38.3	21.5	-12.4	-24.6	-38.3	21.5	-15.3	-30.1	-46.8	21.5
	5:12	-12.4	-24.6	-38.3	20.0	-12.4	-24.6	-38.3	20.0	-15.4	-30.2	-46.8	20.0
	6:12	-12.5	-24.7	-38.4	18.6	-12.5	-24.7	-38.4	18.6	-15.4	-30.2	-46.9	18.6
	7:12	-14.0	-17.1	-17.1	20.1	-14.0	-17.1	-17.1	20.1	-17.3	-21.0	-21.0	22.3
	8:12	-14.1	-17.1	-17.1	19.0	-14.1	-17.1	-17.1	19.0	-17.4	-21.1	-21.1	21.2
	9:12	-14.1	-17.2	-17.2	18.0	-14.1	-17.2	-17.2	18.0	-17.4	-21.1	-21.1	20.2
	10:12	-14.2	-17.2	-17.2	17.1	-14.2	-17.2	-17.2	17.1	-17.4	-21.1	-21.1	19.3
	11:12	-14.2	-17.3	-17.3	16.3	-14.2	-17.3	-17.3	16.3	-17.5	-21.2	-21.2	19.2
	12:12	-14.3	-17.3	-17.3	16.2	-14.3	-17.3	-17.3	16.2	-17.5	-21.2	-21.2	19.1
Exposure Category C	1:12	-17.1	-31.9	-50.4	25.9	-20.0	-37.0	-58.3	25.9	-23.2	-42.9	-67.5	25.9
	2:12	-15.3	-30.1	-46.7	24.5	-17.8	-34.9	-54.1	25.0	-20.8	-40.4	-62.6	26.3
	3:12	-15.3	-30.1	-46.8	23.0	-17.9	-34.9	-54.1	23.5	-20.8	-40.5	-62.6	24.8
	4:12	-15.3	-30.1	-46.8	21.5	-17.9	-34.9	-54.1	22.0	-20.8	-40.5	-62.6	23.2
	5:12	-15.4	-30.2	-46.8	20.0	-17.9	-35.0	-54.2	20.5	-20.9	-40.5	-62.7	21.8
	6:12	-15.4	-30.2	-46.9	18.6	-18.0	-35.0	-54.2	19.1	-20.9	-40.6	-62.7	20.4
	7:12	-17.3	-21.0	-21.0	22.3	-20.1	-24.4	-24.4	24.3	-23.4	-28.3	-28.3	26.5
	8:12	-17.4	-21.1	-21.1	21.2	-20.2	-24.4	-24.4	23.1	-23.4	-28.4	-28.4	25.3
	9:12	-17.4	-21.1	-21.1	20.2	-20.2	-24.5	-24.5	22.1	-23.5	-28.4	-28.4	24.9
	10:12	-17.4	-21.1	-21.1	19.3	-20.3	-24.5	-24.5	21.9	-23.5	-28.4	-28.4	24.8
	11:12	-17.5	-21.2	-21.2	19.2	-20.3	-24.6	-24.6	21.8	-23.6	-28.5	-28.5	24.7
	12:12	-17.5	-21.2	-21.2	19.1	-20.4	-24.6	-24.6	21.7	-23.6	-28.5	-28.5	24.6
Exposure Category D	1:12	-21.0	-39.0	-61.4	25.9	-23.9	-44.1	-69.3	25.9	-27.1	-49.9	-78.4	25.9
	2:12	-18.8	-36.7	-56.9	25.4	-21.4	-41.6	-64.3	26.5	-24.3	-47.1	-72.8	27.7
	3:12	-18.8	-36.8	-56.9	24.0	-21.4	-41.6	-64.3	25.0	-24.3	-47.1	-72.8	26.2
	4:12	-18.9	-36.8	-57.0	22.4	-21.4	-41.6	-64.3	23.5	-24.4	-47.2	-72.8	24.7
	5:12	-18.9	-36.8	-57.0	20.9	-21.4	-41.6	-64.4	22.0	-24.4	-47.2	-72.8	23.2
	6:12	-18.9	-36.9	-57.0	19.6	-21.5	-41.7	-64.4	20.6	-24.4	-47.2	-72.9	21.8
	7:12	-21.2	-25.7	-25.7	25.0	-24.1	-29.1	-29.1	26.9	-27.3	-33.0	-33.0	29.1
	8:12	-21.3	-25.8	-25.8	23.8	-24.1	-29.1	-29.1	25.7	-27.4	-33.1	-33.1	28.6
	9:12	-21.3	-25.8	-25.8	23.0	-24.1	-29.2	-29.2	25.5	-27.4	-33.1	-33.1	28.5
	10:12	-21.4	-25.8	-25.8	22.9	-24.2	-29.2	-29.2	25.4	-27.4	-33.1	-33.1	28.3
	11:12	-21.4	-25.9	-25.9	22.7	-24.2	-29.3	-29.3	25.3	-27.5	-33.2	-33.2	28.2
	12:12	-21.4	-25.9	-25.9	22.6	-24.3	-29.3	-29.3	25.2	-27.5	-33.2	-33.2	28.1

Side Load (psf)

	Roof Pitch	Ss = 0.0	Ss = 0.1	Ss = 0.2	Ss = 0.3	Ss = 0.4	Ss = 0.5	Ss = 1.0	Ss = 1.25	Ss = 1.5	Ss = 2.0	Ss = 2.5	Ss = 3.1
Down Slope	1:12	2.0	2.0	2.0	2.0	2.1	2.2	2.6	2.8	3.0	3.5	4.0	4.6
	2:12	3.6	3.6	3.6	3.6	3.6	3.6	4.0	4.1	4.4	4.9	5.4	6.0
	3:12	5.0	5.0	5.0	5.0	5.0	5.0	5.1	5.2	5.5	6.0	6.5	7.1
	4:12	6.1	6.1	6.1	6.1	6.1	6.1	6.1	6.1	6.4	6.9	7.4	8.0
	5:12	7.0	7.0	7.0	7.0	7.0	7.0	7.0	7.0	7.0	7.5	8.0	8.6
	6:12	7.5	7.5	7.5	7.5	7.5	7.5	7.5	7.5	7.5	8.0	8.5	9.1
	7:12	7.9	7.9	7.9	7.9	7.9	7.9	7.9	7.9	7.9	8.3	8.8	9.4
	8:12	8.1	8.1	8.1	8.1	8.1	8.1	8.1	8.1	8.1	8.5	9.0	9.5
	9:12	8.2	8.2	8.2	8.2	8.2	8.2	8.2	8.2	8.2	8.5	9.0	9.6
	10:12	8.2	8.2	8.2	8.2	8.2	8.2	8.2	8.2	8.2	8.5	9.0	9.5
	11:12	8.1	8.1	8.1	8.1	8.1	8.1	8.1	8.1	8.1	8.4	8.9	9.4
	12:12	7.9	7.9	7.9	7.9	7.9	7.9	7.9	7.9	7.9	8.3	8.7	9.2

Lateral

Ss = 0.0	Ss = 0.1	Ss = 0.2	Ss = 0.3	Ss = 0.4	Ss = 0.5	Ss = 1.0	Ss = 1.25	Ss = 1.5	Ss = 2.0	Ss = 2.5	Ss = 3.1
0.0	0.2	0.4	0.6	0.8	0.9	1.4	1.6	2.0	2.6	3.3	4.0

* These tables are meant as representative of the areas listed in the title. The local wind speeds and snow loads should be independantly verifed for the specific install location.

East Coast (Low Snow)*

APPENDIX - Pressure Tables for Flush Mounted Roof Systems

7-05 ASCE

110 mph Basic Wind Speed

10 psf Ground Snow Load

SM SOLAR MOUNT

APPENDIX B

Pressure Lookup Tables

Up and Down (psf)

	Roof Pitch	Bldg. Height = 15 ft. Up Pressures (psf) Zone 1	Zone 2	Zone 3	Down (psf)	Bldg. Height = 30 ft. Up Pressures (psf) Zone 1	Zone 2	Zone 3	Down (psf)	Bldg. Height = 60 ft. Up Pressures (psf) Zone 1	Zone 2	Zone 3	Down (psf)
Exposure Category B	1:12	-17.1	-31.8	-50.2	18.4	-17.1	-31.8	-50.2	18.4	-21.0	-38.9	-61.3	18.4
	2:12	-15.2	-30.0	-46.6	17.7	-15.2	-30.0	-46.6	17.7	-18.8	-36.7	-56.8	18.6
	3:12	-15.3	-30.0	-46.6	17.0	-15.3	-30.0	-46.6	17.0	-18.8	-36.7	-56.9	17.9
	4:12	-15.3	-30.0	-46.6	16.2	-15.3	-30.0	-46.6	16.2	-18.8	-36.7	-56.9	17.1
	5:12	-15.3	-30.1	-46.7	15.4	-15.3	-30.1	-46.7	15.4	-18.9	-36.8	-56.9	16.3
	6:12	-15.4	-30.1	-46.7	14.6	-15.4	-30.1	-46.7	14.6	-18.9	-36.8	-57.0	15.5
	7:12	-17.2	-20.9	-20.9	19.6	-17.2	-20.9	-20.9	19.6	-21.2	-25.7	-25.7	23.2
	8:12	-17.3	-21.0	-21.0	19.5	-17.3	-21.0	-21.0	19.5	-21.2	-25.7	-25.7	23.1
	9:12	-17.3	-21.0	-21.0	19.4	-17.3	-21.0	-21.0	19.4	-21.3	-25.8	-25.8	22.9
	10:12	-17.4	-21.1	-21.1	19.3	-17.4	-21.1	-21.1	19.3	-21.3	-25.8	-25.8	22.8
	11:12	-17.4	-21.1	-21.1	19.2	-17.4	-21.1	-21.1	19.2	-21.4	-25.8	-25.8	22.7
	12:12	-17.5	-21.1	-21.1	19.1	-17.5	-21.1	-21.1	19.1	-21.4	-25.9	-25.9	22.6
Exposure Category C	1:12	-21.0	-38.9	-61.3	18.4	-24.4	-45.1	-70.9	18.4	-28.4	-52.2	-81.9	18.4
	2:12	-18.8	-36.7	-56.8	18.6	-21.9	-42.5	-65.7	19.9	-25.4	-49.2	-76.0	21.4
	3:12	-18.8	-36.7	-56.9	17.9	-21.9	-42.5	-65.8	19.1	-25.4	-49.2	-76.0	20.6
	4:12	-18.8	-36.7	-56.9	17.1	-21.9	-42.6	-65.8	18.3	-25.5	-49.3	-76.1	19.8
	5:12	-18.9	-36.8	-56.9	16.3	-22.0	-42.6	-65.8	17.6	-25.5	-49.3	-76.1	19.0
	6:12	-18.9	-36.8	-57.0	15.5	-22.0	-42.6	-65.9	16.8	-25.5	-49.3	-76.1	18.3
	7:12	-21.2	-25.7	-25.7	23.2	-24.6	-29.8	-29.8	26.2	-28.6	-34.5	-34.5	29.8
	8:12	-21.2	-25.7	-25.7	23.1	-24.7	-29.8	-29.8	26.1	-28.6	-34.6	-34.6	29.7
	9:12	-21.3	-25.8	-25.8	22.9	-24.7	-29.9	-29.9	26.0	-28.7	-34.6	-34.6	29.6
	10:12	-21.3	-25.8	-25.8	22.8	-24.7	-29.9	-29.9	25.9	-28.7	-34.6	-34.6	29.5
	11:12	-21.4	-25.8	-25.8	22.7	-24.8	-29.9	-29.9	25.8	-28.7	-34.7	-34.7	29.4
	12:12	-21.4	-25.9	-25.9	22.6	-24.8	-30.0	-30.0	25.7	-28.8	-34.7	-34.7	29.3
Exposure Category D	1:12	-25.7	-47.4	-74.6	18.4	-29.2	-53.6	-84.1	18.4	-33.1	-60.7	-95.2	18.7
	2:12	-23.1	-44.7	-69.2	20.4	-26.1	-50.6	-78.1	21.7	-29.7	-57.3	-88.3	23.2
	3:12	-23.1	-44.8	-69.2	19.6	-26.2	-50.6	-78.1	20.9	-29.7	-57.3	-88.3	22.4
	4:12	-23.1	-44.8	-69.2	18.8	-26.2	-50.6	-78.1	20.1	-29.7	-57.3	-88.4	21.6
	5:12	-23.1	-44.8	-69.2	18.1	-26.2	-50.7	-78.1	19.3	-29.8	-57.4	-88.4	20.8
	6:12	-23.2	-44.9	-69.3	17.3	-26.3	-50.7	-78.2	18.6	-29.8	-57.4	-88.4	20.4
	7:12	-25.9	-31.4	-31.4	27.4	-29.4	-35.5	-35.5	30.5	-33.3	-40.2	-40.2	34.1
	8:12	-26.0	-31.4	-31.4	27.3	-29.4	-35.5	-35.5	30.4	-33.3	-40.2	-40.2	34.0
	9:12	-26.0	-31.4	-31.4	27.2	-29.4	-35.6	-35.6	30.3	-33.4	-40.3	-40.3	33.8
	10:12	-26.1	-31.5	-31.5	27.1	-29.5	-35.6	-35.6	30.2	-33.4	-40.3	-40.3	33.7
	11:12	-26.1	-31.5	-31.5	27.0	-29.5	-35.6	-35.6	30.1	-33.5	-40.4	-40.4	33.6
	12:12	-26.1	-31.6	-31.6	26.9	-29.6	-35.7	-35.7	30.0	-33.5	-40.4	-40.4	33.5

Side Load (psf)

	Roof Pitch	Ss = 0.0	Ss = 0.1	Ss = 0.2	Ss = 0.3	Ss = 0.4	Ss = 0.5	Ss = 1.0	Ss = 1.25	Ss = 1.5	Ss = 2.0	Ss = 2.5	Ss = 3.1
Down Slope	1:12	1.1	1.1	1.2	1.4	1.5	1.6	2.0	2.2	2.4	2.9	3.6	4.4
	2:12	2.1	2.1	2.1	2.2	2.3	2.4	2.8	3.0	3.2	3.7	4.2	4.8
	3:12	2.9	2.9	2.9	2.9	3.0	3.1	3.5	3.7	3.9	4.4	4.9	5.5
	4:12	3.6	3.6	3.6	3.6	3.6	3.7	4.1	4.2	4.5	5.0	5.5	6.1
	5:12	4.1	4.1	4.1	4.1	4.1	4.1	4.5	4.7	4.9	5.4	5.9	6.5
	6:12	4.6	4.6	4.6	4.6	4.6	4.6	4.9	5.0	5.3	5.8	6.3	6.9
	7:12	4.8	4.8	4.8	4.8	4.8	4.8	5.1	5.3	5.5	6.0	6.5	7.1
	8:12	5.0	5.0	5.0	5.0	5.0	5.0	5.3	5.5	5.7	6.2	6.6	7.2
	9:12	5.2	5.2	5.2	5.2	5.2	5.2	5.4	5.6	5.8	6.3	6.7	7.3
	10:12	5.2	5.2	5.2	5.2	5.2	5.2	5.5	5.6	5.8	6.3	6.7	7.3
	11:12	5.2	5.2	5.2	5.2	5.2	5.2	5.5	5.6	5.8	6.3	6.7	7.3
	12:12	5.2	5.2	5.2	5.2	5.2	5.2	5.5	5.6	5.8	6.2	6.7	7.2

Lateral

Ss = 0.0	Ss = 0.1	Ss = 0.2	Ss = 0.3	Ss = 0.4	Ss = 0.5	Ss = 1.0	Ss = 1.25	Ss = 1.5	Ss = 2.0	Ss = 2.5	Ss = 3.1
0.0	0.2	0.4	0.6	0.8	0.9	1.4	1.6	2.0	2.6	3.3	4.0

* These tables are meant as representative of the areas listed in the title. The local wind speeds and snow loads should be independantly verifed for the specific install location.

New Jersey (Typical)*

APPENDIX - Pressure Tables for Flush Mounted Roof Systems

7-05 ASCE

115 mph Basic Wind Speed

25 psf Ground Snow Load

SM SOLAR MOUNT

APPENDIX B

Pressure Lookup Tables

Up and Down (psf)

	Roof Pitch	Bldg. Height = 15 ft. Up Pressures (psf) Zone 1	Zone 2	Zone 3	Down (psf)	Bldg. Height = 30 ft. Up Pressures (psf) Zone 1	Zone 2	Zone 3	Down (psf)	Bldg. Height = 60 ft. Up Pressures (psf) Zone 1	Zone 2	Zone 3	Down (psf)
Exposure Category B	1:12	-18.8	-34.9	-55.0	25.9	-18.8	-34.9	-55.0	25.9	-23.1	-42.7	-67.1	25.9
	2:12	-16.8	-32.9	-51.0	24.6	-16.8	-32.9	-51.0	24.6	-20.7	-40.2	-62.2	26.2
	3:12	-16.8	-32.9	-51.0	23.1	-16.8	-32.9	-51.0	23.1	-20.7	-40.2	-62.3	24.7
	4:12	-16.8	-32.9	-51.1	21.6	-16.8	-32.9	-51.1	21.6	-20.7	-40.3	-62.3	23.2
	5:12	-16.9	-33.0	-51.1	20.1	-16.9	-33.0	-51.1	20.1	-20.7	-40.3	-62.3	21.7
	6:12	-16.9	-33.0	-51.1	18.7	-16.9	-33.0	-51.1	18.7	-20.8	-40.4	-62.4	20.3
	7:12	-19.0	-23.0	-23.0	23.5	-19.0	-23.0	-23.0	23.5	-23.3	-28.2	-28.2	26.4
	8:12	-19.0	-23.0	-23.0	22.3	-19.0	-23.0	-23.0	22.3	-23.3	-28.2	-28.2	25.2
	9:12	-19.0	-23.1	-23.1	21.3	-19.0	-23.1	-23.1	21.3	-23.4	-28.3	-28.3	24.8
	10:12	-19.1	-23.1	-23.1	20.8	-19.1	-23.1	-23.1	20.8	-23.4	-28.3	-28.3	24.7
	11:12	-19.1	-23.2	-23.2	20.7	-19.1	-23.2	-23.2	20.7	-23.4	-28.3	-28.3	24.6
	12:12	-19.2	-23.2	-23.2	20.6	-19.2	-23.2	-23.2	20.6	-23.5	-28.4	-28.4	24.5
Exposure Category C	1:12	-23.1	-42.7	-67.1	25.9	-26.8	-49.4	-77.6	25.9	-31.1	-57.2	-89.7	25.9
	2:12	-20.7	-40.2	-62.2	26.2	-24.0	-46.6	-72.0	27.6	-27.9	-53.9	-83.2	29.2
	3:12	-20.7	-40.2	-62.3	24.7	-24.0	-46.6	-72.0	26.1	-27.9	-53.9	-83.2	27.7
	4:12	-20.7	-40.3	-62.3	23.2	-24.1	-46.6	-72.0	24.6	-28.0	-54.0	-83.2	26.2
	5:12	-20.7	-40.3	-62.3	21.7	-24.1	-46.7	-72.1	23.1	-28.0	-54.0	-83.3	24.7
	6:12	-20.8	-40.4	-62.4	20.3	-24.2	-46.7	-72.1	21.7	-28.0	-54.1	-83.3	23.3
	7:12	-23.3	-28.2	-28.2	26.4	-27.0	-32.7	-32.7	28.9	-31.3	-37.8	-37.8	32.3
	8:12	-23.3	-28.2	-28.2	25.2	-27.1	-32.7	-32.7	28.3	-31.4	-37.9	-37.9	32.2
	9:12	-23.4	-28.3	-28.3	24.8	-27.1	-32.7	-32.7	28.2	-31.4	-37.9	-37.9	32.1
	10:12	-23.4	-28.3	-28.3	24.7	-27.1	-32.8	-32.8	28.1	-31.5	-38.0	-38.0	32.0
	11:12	-23.4	-28.3	-28.3	24.6	-27.2	-32.8	-32.8	28.0	-31.5	-38.0	-38.0	31.8
	12:12	-23.5	-28.4	-28.4	24.5	-27.2	-32.9	-32.9	27.9	-31.5	-38.0	-38.0	31.7
Exposure Category D	1:12	-28.3	-52.0	-81.6	25.9	-32.0	-58.7	-92.1	25.9	-36.3	-66.5	-104.2	26.9
	2:12	-25.3	-49.0	-75.7	28.2	-28.7	-55.4	-85.4	29.6	-32.6	-62.7	-96.7	31.2
	3:12	-25.3	-49.1	-75.7	26.7	-28.7	-55.4	-85.5	28.1	-32.6	-62.8	-96.7	29.7
	4:12	-25.4	-49.1	-75.8	25.1	-28.7	-55.4	-85.5	26.5	-32.6	-62.8	-96.7	28.2
	5:12	-25.4	-49.1	-75.8	23.7	-28.8	-55.5	-85.5	25.1	-32.7	-62.8	-96.7	26.7
	6:12	-25.4	-49.2	-75.8	22.3	-28.8	-55.5	-85.6	23.7	-32.7	-62.9	-96.8	25.3
	7:12	-28.5	-34.4	-34.4	29.9	-32.2	-38.9	-38.9	33.1	-36.5	-44.1	-44.1	36.9
	8:12	-28.5	-34.4	-34.4	29.6	-32.2	-38.9	-38.9	33.0	-36.6	-44.1	-44.1	36.8
	9:12	-28.5	-34.5	-34.5	29.5	-32.3	-39.0	-39.0	32.8	-36.6	-44.1	-44.1	36.7
	10:12	-28.6	-34.5	-34.5	29.4	-32.3	-39.0	-39.0	32.7	-36.6	-44.2	-44.2	36.6
	11:12	-28.6	-34.6	-34.6	29.3	-32.4	-39.0	-39.0	32.6	-36.7	-44.2	-44.2	36.5
	12:12	-28.7	-34.6	-34.6	29.1	-32.4	-39.1	-39.1	32.5	-36.7	-44.3	-44.3	36.4

Side Load (psf)

Down Slope	Roof Pitch	Ss = 0.0	Ss = 0.1	Ss = 0.2	Ss = 0.3	Ss = 0.4	Ss = 0.5	Ss = 1.0	Ss = 1.25	Ss = 1.5	Ss = 2.0	Ss = 2.5	Ss = 3.1
	1:12	2.0	2.0	2.0	2.0	2.1	2.2	2.6	2.8	3.0	3.5	4.0	4.6
	2:12	3.6	3.6	3.6	3.6	3.6	3.6	4.0	4.1	4.4	4.9	5.4	6.0
	3:12	5.0	5.0	5.0	5.0	5.0	5.0	5.1	5.2	5.5	6.0	6.5	7.1
	4:12	6.1	6.1	6.1	6.1	6.1	6.1	6.1	6.1	6.4	6.9	7.4	8.0
	5:12	7.0	7.0	7.0	7.0	7.0	7.0	7.0	7.0	7.0	7.5	8.0	8.6
	6:12	7.5	7.5	7.5	7.5	7.5	7.5	7.5	7.5	7.5	8.0	8.5	9.1
	7:12	7.9	7.9	7.9	7.9	7.9	7.9	7.9	7.9	7.9	8.3	8.8	9.4
	8:12	8.1	8.1	8.1	8.1	8.1	8.1	8.1	8.1	8.1	8.5	9.0	9.5
	9:12	8.2	8.2	8.2	8.2	8.2	8.2	8.2	8.2	8.2	8.5	9.0	9.6
	10:12	8.2	8.2	8.2	8.2	8.2	8.2	8.2	8.2	8.2	8.5	9.0	9.5
	11:12	8.1	8.1	8.1	8.1	8.1	8.1	8.1	8.1	8.1	8.4	8.9	9.4
	12:12	7.9	7.9	7.9	7.9	7.9	7.9	7.9	7.9	7.9	8.3	8.7	9.2

Lateral

Ss = 0.0	Ss = 0.1	Ss = 0.2	Ss = 0.3	Ss = 0.4	Ss = 0.5	Ss = 1.0	Ss = 1.25	Ss = 1.5	Ss = 2.0	Ss = 2.5	Ss = 3.1
0.0	0.2	0.4	0.6	0.8	0.9	1.4	1.6	2.0	2.6	3.3	4.0

* These tables are meant as representative of the areas listed in the title. The local wind speeds and snow loads should be independantly verifed for the specific install location.

Louisiana (Typical)*

APPENDIX - Pressure Tables for Flush Mounted Roof Systems

7-05 ASCE

120 mph Basic Wind Speed

0 psf Ground Snow Load

SM SOLAR MOUNT

APPENDIX B

Pressure Lookup Tables

Up and Down (psf)

	Roof Pitch	Bldg. Height = 15 ft. Up Pressures (psf) Zone 1	Zone 2	Zone 3	Down (psf)	Bldg. Height = 30 ft. Up Pressures (psf) Zone 1	Zone 2	Zone 3	Down (psf)	Bldg. Height = 60 ft. Up Pressures (psf) Zone 1	Zone 2	Zone 3	Down (psf)
Exposure Category B	1:12	-20.6	-38.1	-60.0	13.5	-20.6	-38.1	-60.0	13.5	-25.3	-46.6	-73.2	13.5
	2:12	-18.4	-35.9	-55.7	14.4	-18.4	-35.9	-55.7	14.4	-22.6	-43.9	-67.9	16.8
	3:12	-18.4	-36.0	-55.7	14.4	-18.4	-36.0	-55.7	14.4	-22.6	-43.9	-67.9	16.7
	4:12	-18.4	-36.0	-55.7	14.3	-18.4	-36.0	-55.7	14.3	-22.7	-44.0	-67.9	16.6
	5:12	-18.5	-36.0	-55.8	14.2	-18.5	-36.0	-55.8	14.2	-22.7	-44.0	-68.0	16.5
	6:12	-18.5	-36.1	-55.8	14.1	-18.5	-36.1	-55.8	14.1	-22.7	-44.0	-68.0	16.4
	7:12	-20.7	-25.1	-25.1	22.8	-20.7	-25.1	-25.1	22.8	-25.4	-30.8	-30.8	27.0
	8:12	-20.8	-25.2	-25.2	22.7	-20.8	-25.2	-25.2	22.7	-25.5	-30.8	-30.8	26.9
	9:12	-20.8	-25.2	-25.2	22.5	-20.8	-25.2	-25.2	22.5	-25.5	-30.9	-30.9	26.8
	10:12	-20.9	-25.3	-25.3	22.4	-20.9	-25.3	-25.3	22.4	-25.6	-30.9	-30.9	26.7
	11:12	-20.9	-25.3	-25.3	22.3	-20.9	-25.3	-25.3	22.3	-25.6	-30.9	-30.9	26.5
	12:12	-21.0	-25.3	-25.3	22.2	-21.0	-25.3	-25.3	22.2	-25.7	-31.0	-31.0	26.4
Exposure Category C	1:12	-25.3	-46.6	-73.2	13.5	-29.3	-53.9	-84.6	13.5	-34.0	-62.4	-97.8	14.1
	2:12	-22.6	-43.9	-67.9	16.8	-26.3	-50.8	-78.5	18.8	-30.5	-58.8	-90.7	21.2
	3:12	-22.6	-43.9	-67.9	16.7	-26.3	-50.9	-78.5	18.7	-30.5	-58.9	-90.7	21.1
	4:12	-22.7	-44.0	-67.9	16.6	-26.3	-50.9	-78.5	18.7	-30.6	-58.9	-90.8	21.0
	5:12	-22.7	-44.0	-68.0	16.5	-26.4	-50.9	-78.6	18.6	-30.6	-58.9	-90.8	20.9
	6:12	-22.7	-44.0	-68.0	16.4	-26.4	-51.0	-78.6	18.5	-30.6	-59.0	-90.8	20.8
	7:12	-25.4	-30.8	-30.8	27.0	-29.5	-35.7	-35.7	30.7	-34.2	-41.3	-41.3	34.9
	8:12	-25.5	-30.8	-30.8	26.9	-29.6	-35.7	-35.7	30.5	-34.3	-41.3	-41.3	34.8
	9:12	-25.5	-30.9	-30.9	26.8	-29.6	-35.7	-35.7	30.4	-34.3	-41.4	-41.4	34.7
	10:12	-25.6	-30.9	-30.9	26.7	-29.7	-35.8	-35.8	30.3	-34.4	-41.4	-41.4	34.6
	11:12	-25.6	-30.9	-30.9	26.5	-29.7	-35.8	-35.8	30.2	-34.4	-41.5	-41.5	34.4
	12:12	-25.7	-31.0	-31.0	26.4	-29.7	-35.9	-35.9	30.1	-34.4	-41.5	-41.5	34.3
Exposure Category D	1:12	-30.9	-56.7	-89.0	13.5	-35.0	-64.1	-100.4	14.4	-39.7	-72.5	-113.6	15.8
	2:12	-27.7	-53.5	-82.6	19.6	-31.4	-60.4	-93.1	21.6	-35.6	-68.4	-105.4	24.0
	3:12	-27.7	-53.5	-82.6	19.5	-31.4	-60.5	-93.2	21.6	-35.6	-68.4	-105.4	23.9
	4:12	-27.7	-53.6	-82.6	19.5	-31.4	-60.5	-93.2	21.5	-35.6	-68.5	-105.4	23.8
	5:12	-27.8	-53.6	-82.6	19.4	-31.4	-60.5	-93.2	21.4	-35.7	-68.5	-105.5	23.8
	6:12	-27.8	-53.6	-82.7	19.3	-31.5	-60.6	-93.3	21.3	-35.7	-68.6	-105.5	23.7
	7:12	-31.1	-37.5	-37.5	32.1	-35.2	-42.4	-42.4	35.7	-39.9	-48.1	-48.1	40.0
	8:12	-31.1	-37.6	-37.6	32.0	-35.2	-42.5	-42.5	35.6	-39.9	-48.1	-48.1	39.9
	9:12	-31.2	-37.6	-37.6	31.8	-35.2	-42.5	-42.5	35.5	-39.9	-48.2	-48.2	39.7
	10:12	-31.2	-37.7	-37.7	31.7	-35.3	-42.6	-42.6	35.4	-40.0	-48.2	-48.2	39.6
	11:12	-31.3	-37.7	-37.7	31.6	-35.3	-42.6	-42.6	35.3	-40.0	-48.2	-48.2	39.5
	12:12	-31.3	-37.8	-37.8	31.5	-35.4	-42.6	-42.6	35.2	-40.1	-48.3	-48.3	39.4

Side Load (psf)

	Roof Pitch	Ss = 0.0	Ss = 0.1	Ss = 0.2	Ss = 0.3	Ss = 0.4	Ss = 0.5	Ss = 1.0	Ss = 1.25	Ss = 1.5	Ss = 2.0	Ss = 2.5	Ss = 3.1
Down Slope	1:12	0.3	0.5	0.7	0.9	1.1	1.2	1.8	2.0	2.3	2.9	3.6	4.4
	2:12	0.6	0.8	1.0	1.2	1.4	1.5	2.1	2.3	2.6	3.3	3.9	4.7
	3:12	0.8	1.1	1.3	1.5	1.6	1.8	2.3	2.5	2.9	3.5	4.2	5.0
	4:12	1.1	1.3	1.5	1.7	1.9	2.0	2.6	2.8	3.1	3.8	4.5	5.3
	5:12	1.3	1.6	1.8	2.0	2.1	2.3	2.8	3.0	3.3	4.0	4.7	5.5
	6:12	1.6	1.8	2.0	2.2	2.3	2.5	3.0	3.2	3.5	4.2	4.8	5.6
	7:12	1.8	2.0	2.2	2.4	2.5	2.7	3.2	3.4	3.7	4.3	5.0	5.8
	8:12	1.9	2.1	2.3	2.5	2.7	2.8	3.3	3.5	3.8	4.5	5.1	5.9
	9:12	2.1	2.3	2.5	2.7	2.8	3.0	3.5	3.6	4.0	4.6	5.2	5.9
	10:12	2.2	2.4	2.6	2.8	3.0	3.1	3.6	3.8	4.1	4.7	5.3	6.0
	11:12	2.4	2.6	2.7	2.9	3.1	3.2	3.7	3.8	4.1	4.7	5.3	6.0
	12:12	2.5	2.7	2.8	3.0	3.2	3.3	3.7	3.9	4.2	4.8	5.4	6.1

Lateral

Ss = 0.0	Ss = 0.1	Ss = 0.2	Ss = 0.3	Ss = 0.4	Ss = 0.5	Ss = 1.0	Ss = 1.25	Ss = 1.5	Ss = 2.0	Ss = 2.5	Ss = 3.1
0.0	0.2	0.4	0.6	0.8	0.9	1.4	1.6	2.0	2.6	3.3	4.0

* These tables are meant as representative of the areas listed in the title. The local wind speeds and snow loads should be independantly verifed for the specific install location.

Florida (Typical)*

APPENDIX - Pressure Tables for Flush Mounted Roof Systems

7-05 ASCE

140 mph Basic Wind Speed

0 psf Ground Snow Load

SM SOLAR MOUNT

APPENDIX B

Pressure Lookup Tables

Up and Down (psf)

	Roof Pitch	Bldg. Height = 15 ft. Up Pressures (psf) Zone 1	Zone 2	Zone 3	Down (psf)	Bldg. Height = 30 ft. Up Pressures (psf) Zone 1	Zone 2	Zone 3	Down (psf)	Bldg. Height = 60 ft. Up Pressures (psf) Zone 1	Zone 2	Zone 3	Down (psf)
Exposure Category B	1:12	-28.5	-52.4	-82.2	13.5	-28.5	-52.4	-82.2	13.5	-34.9	-63.9	-100.1	14.4
	2:12	-25.5	-49.4	-76.3	18.4	-25.5	-49.4	-76.3	18.4	-31.3	-60.3	-92.9	21.6
	3:12	-25.5	-49.4	-76.3	18.3	-25.5	-49.4	-76.3	18.3	-31.3	-60.3	-92.9	21.5
	4:12	-25.6	-49.4	-76.3	18.2	-25.6	-49.4	-76.3	18.2	-31.3	-60.3	-93.0	21.4
	5:12	-25.6	-49.5	-76.4	18.2	-25.6	-49.5	-76.4	18.2	-31.4	-60.4	-93.0	21.4
	6:12	-25.6	-49.5	-76.4	18.1	-25.6	-49.5	-76.4	18.1	-31.4	-60.4	-93.0	21.3
	7:12	-28.7	-34.6	-34.6	29.9	-28.7	-34.6	-34.6	29.9	-35.1	-42.3	-42.3	35.6
	8:12	-28.7	-34.7	-34.7	29.8	-28.7	-34.7	-34.7	29.8	-35.1	-42.4	-42.4	35.5
	9:12	-28.8	-34.7	-34.7	29.7	-28.8	-34.7	-34.7	29.7	-35.2	-42.4	-42.4	35.4
	10:12	-28.8	-34.8	-34.8	29.6	-28.8	-34.8	-34.8	29.6	-35.2	-42.4	-42.4	35.3
	11:12	-28.8	-34.8	-34.8	29.4	-28.8	-34.8	-34.8	29.4	-35.2	-42.5	-42.5	35.2
	12:12	-28.9	-34.9	-34.9	29.3	-28.9	-34.9	-34.9	29.3	-35.3	-42.5	-42.5	35.1
Exposure Category C	1:12	-34.9	-63.9	-100.1	14.4	-40.4	-73.9	-115.7	16.0	-46.8	-85.4	-133.6	17.9
	2:12	-31.3	-60.3	-92.9	21.6	-36.3	-69.7	-107.3	24.3	-42.0	-80.6	-123.9	27.5
	3:12	-31.3	-60.3	-92.9	21.5	-36.3	-69.7	-107.3	24.3	-42.0	-80.6	-124.0	27.5
	4:12	-31.3	-60.3	-93.0	21.4	-36.3	-69.7	-107.4	24.2	-42.1	-80.6	-124.0	27.4
	5:12	-31.4	-60.4	-93.0	21.4	-36.3	-69.8	-107.4	24.1	-42.1	-80.7	-124.0	27.3
	6:12	-31.4	-60.4	-93.0	21.3	-36.4	-69.8	-107.4	24.0	-42.1	-80.7	-124.1	27.2
	7:12	-35.1	-42.3	-42.3	35.6	-40.6	-49.0	-49.0	40.6	-47.0	-56.6	-56.6	46.4
	8:12	-35.1	-42.4	-42.4	35.5	-40.7	-49.0	-49.0	40.5	-47.0	-56.7	-56.7	46.3
	9:12	-35.2	-42.4	-42.4	35.4	-40.7	-49.1	-49.1	40.4	-47.1	-56.7	-56.7	46.2
	10:12	-35.2	-42.4	-42.4	35.3	-40.7	-49.1	-49.1	40.3	-47.1	-56.8	-56.8	46.1
	11:12	-35.2	-42.5	-42.5	35.2	-40.8	-49.1	-49.1	40.2	-47.2	-56.8	-56.8	46.0
	12:12	-35.3	-42.5	-42.5	35.1	-40.8	-49.2	-49.2	40.1	-47.2	-56.9	-56.9	45.8
Exposure Category D	1:12	-42.6	-77.7	-121.6	16.7	-48.1	-87.7	-137.2	18.3	-54.5	-99.2	-155.1	20.2
	2:12	-38.2	-73.3	-112.9	25.4	-43.2	-82.7	-127.3	28.2	-48.9	-93.6	-143.9	31.4
	3:12	-38.2	-73.3	-112.9	25.4	-43.2	-82.8	-127.3	28.1	-48.9	-93.6	-143.9	31.3
	4:12	-38.2	-73.4	-112.9	25.3	-43.2	-82.8	-127.3	28.1	-49.0	-93.7	-144.0	31.3
	5:12	-38.3	-73.4	-112.9	25.2	-43.3	-82.8	-127.4	28.0	-49.0	-93.7	-144.0	31.2
	6:12	-38.3	-73.4	-113.0	25.1	-43.3	-82.9	-127.4	27.9	-49.1	-93.8	-144.0	31.1
	7:12	-42.7	-51.5	-51.5	42.6	-48.3	-58.2	-58.2	47.5	-54.7	-65.9	-65.9	53.3
	8:12	-42.8	-51.6	-51.6	42.4	-48.3	-58.2	-58.2	47.4	-54.7	-65.9	-65.9	53.2
	9:12	-42.8	-51.6	-51.6	42.3	-48.4	-58.3	-58.3	47.3	-54.8	-65.9	-65.9	53.1
	10:12	-42.9	-51.7	-51.7	42.2	-48.4	-58.3	-58.3	47.2	-54.8	-66.0	-66.0	53.0
	11:12	-42.9	-51.7	-51.7	42.1	-48.5	-58.4	-58.4	47.1	-54.9	-66.0	-66.0	52.9
	12:12	-43.0	-51.7	-51.7	42.0	-48.5	-58.4	-58.4	47.0	-54.9	-66.1	-66.1	52.8

Side Load (psf)

Down Slope	Roof Pitch	Ss = 0.0	Ss = 0.1	Ss = 0.2	Ss = 0.3	Ss = 0.4	Ss = 0.5	Ss = 1.0	Ss = 1.25	Ss = 1.5	Ss = 2.0	Ss = 2.5	Ss = 3.1
	1:12	0.3	0.5	0.7	0.9	1.1	1.2	1.8	2.0	2.3	2.9	3.6	4.4
	2:12	0.6	0.8	1.0	1.2	1.4	1.5	2.1	2.3	2.6	3.3	3.9	4.7
	3:12	0.8	1.1	1.3	1.5	1.6	1.8	2.3	2.5	2.9	3.5	4.2	5.0
	4:12	1.1	1.3	1.5	1.7	1.9	2.0	2.6	2.8	3.1	3.8	4.5	5.3
	5:12	1.3	1.6	1.8	2.0	2.1	2.3	2.8	3.0	3.3	4.0	4.7	5.5
	6:12	1.6	1.8	2.0	2.2	2.3	2.5	3.0	3.2	3.5	4.2	4.8	5.6
	7:12	1.8	2.0	2.2	2.4	2.5	2.7	3.2	3.4	3.7	4.3	5.0	5.8
	8:12	1.9	2.1	2.3	2.5	2.7	2.8	3.3	3.5	3.8	4.5	5.1	5.9
	9:12	2.1	2.3	2.5	2.7	2.8	3.0	3.5	3.6	4.0	4.6	5.2	5.9
	10:12	2.2	2.4	2.6	2.8	3.0	3.1	3.6	3.8	4.1	4.7	5.3	6.0
	11:12	2.4	2.6	2.7	2.9	3.1	3.2	3.7	3.8	4.1	4.7	5.3	6.0
	12:12	2.5	2.7	2.8	3.0	3.2	3.3	3.7	3.9	4.2	4.8	5.4	6.1

Lateral

Ss = 0.0	Ss = 0.1	Ss = 0.2	Ss = 0.3	Ss = 0.4	Ss = 0.5	Ss = 1.0	Ss = 1.25	Ss = 1.5	Ss = 2.0	Ss = 2.5	Ss = 3.1
0.0	0.2	0.4	0.6	0.8	0.9	1.4	1.6	2.0	2.6	3.3	4.0

* These tables are meant as representative of the areas listed in the title. The local wind speeds and snow loads should be independantly verifed for the specific install location.

California (Typical)*

APPENDIX - Pressure Tables for Flush Mounted Roof Systems

7-10
ASCE

110 mph Basic Wind Speed

5 psf Ground Snow Load

Up and Down (psf)

	Roof Pitch	Bldg. Height = 15 ft. Up Pressures (psf) Zone 1	Zone 2	Zone 3	Down (psf)	Bldg. Height = 30 ft. Up Pressures (psf) Zone 1	Zone 2	Zone 3	Down (psf)	Bldg. Height = 60 ft. Up Pressures (psf) Zone 1	Zone 2	Zone 3	Down (psf)
Exposure Category B	1:12	-9.8	-18.6	-29.7	14.8	-9.8	-18.6	-29.7	14.8	-12.1	-22.9	-36.3	14.8
	2:12	-8.7	-17.5	-27.5	14.4	-8.7	-17.5	-27.5	14.4	-10.8	-21.6	-33.6	14.4
	3:12	-8.7	-17.6	-27.5	14.0	-8.7	-17.6	-27.5	14.0	-10.8	-21.6	-33.7	14.0
	4:12	-8.7	-17.6	-27.5	13.5	-8.7	-17.6	-27.5	13.5	-10.9	-21.6	-33.7	13.5
	5:12	-8.8	-17.6	-27.6	13.2	-8.8	-17.6	-27.6	13.2	-10.9	-21.6	-33.7	13.2
	6:12	-8.8	-17.7	-27.6	13.0	-8.8	-17.7	-27.6	13.0	-10.9	-21.7	-33.8	13.0
	7:12	-9.9	-12.2	-12.2	13.3	-9.9	-12.2	-12.2	13.3	-12.3	-15.0	-15.0	15.4
	8:12	-10.0	-12.2	-12.2	13.2	-10.0	-12.2	-12.2	13.2	-12.4	-15.0	-15.0	15.3
	9:12	-10.0	-12.2	-12.2	13.0	-10.0	-12.2	-12.2	13.0	-12.4	-15.1	-15.1	15.2
	10:12	-10.1	-12.3	-12.3	12.9	-10.1	-12.3	-12.3	12.9	-12.4	-15.1	-15.1	15.0
	11:12	-10.1	-12.3	-12.3	12.8	-10.1	-12.3	-12.3	12.8	-12.5	-15.2	-15.2	14.9
	12:12	-10.2	-12.4	-12.4	12.7	-10.2	-12.4	-12.4	12.7	-12.5	-15.2	-15.2	14.8
Exposure Category C	1:12	-12.1	-22.9	-36.3	14.8	-14.2	-26.6	-42.1	14.8	-16.6	-30.9	-48.7	14.8
	2:12	-10.8	-21.6	-33.6	14.4	-12.7	-25.1	-39.0	14.4	-14.8	-29.1	-45.1	14.4
	3:12	-10.8	-21.6	-33.7	14.0	-12.7	-25.1	-39.0	14.0	-14.8	-29.1	-45.2	14.0
	4:12	-10.9	-21.6	-33.7	13.5	-12.7	-25.1	-39.0	13.5	-14.8	-29.1	-45.2	13.5
	5:12	-10.9	-21.6	-33.7	13.2	-12.7	-25.1	-39.1	13.2	-14.9	-29.2	-45.2	13.2
	6:12	-10.9	-21.7	-33.8	13.0	-12.8	-25.2	-39.1	13.0	-14.9	-29.2	-45.3	13.0
	7:12	-12.3	-15.0	-15.0	15.4	-14.4	-17.5	-17.5	17.3	-16.7	-20.3	-20.3	19.4
	8:12	-12.4	-15.0	-15.0	15.3	-14.4	-17.5	-17.5	17.1	-16.8	-20.4	-20.4	19.3
	9:12	-12.4	-15.1	-15.1	15.2	-14.5	-17.6	-17.6	17.0	-16.8	-20.4	-20.4	19.1
	10:12	-12.4	-15.1	-15.1	15.0	-14.5	-17.6	-17.6	16.9	-16.9	-20.4	-20.4	19.0
	11:12	-12.5	-15.2	-15.2	14.9	-14.5	-17.6	-17.6	16.8	-16.9	-20.5	-20.5	18.9
	12:12	-12.5	-15.2	-15.2	14.8	-14.6	-17.7	-17.7	16.7	-16.9	-20.5	-20.5	18.8
Exposure Category D	1:12	-15.0	-28.0	-44.3	14.8	-17.0	-31.7	-50.0	14.8	-19.4	-36.0	-56.7	14.8
	2:12	-13.4	-26.4	-41.0	14.4	-15.2	-29.9	-46.4	14.4	-17.4	-33.9	-52.5	15.0
	3:12	-13.4	-26.4	-41.1	14.0	-15.2	-29.9	-46.4	14.0	-17.4	-33.9	-52.6	14.5
	4:12	-13.4	-26.4	-41.1	13.5	-15.3	-29.9	-46.4	13.5	-17.4	-34.0	-52.6	14.1
	5:12	-13.5	-26.5	-41.1	13.2	-15.3	-30.0	-46.5	13.2	-17.4	-34.0	-52.6	13.9
	6:12	-13.5	-26.5	-41.2	13.0	-15.3	-30.0	-46.5	13.0	-17.5	-34.0	-52.7	13.8
	7:12	-15.2	-18.4	-18.4	18.0	-17.2	-20.9	-20.9	19.8	-19.6	-23.7	-23.7	21.9
	8:12	-15.2	-18.5	-18.5	17.8	-17.3	-20.9	-20.9	19.7	-19.6	-23.8	-23.8	21.8
	9:12	-15.2	-18.5	-18.5	17.7	-17.3	-21.0	-21.0	19.6	-19.7	-23.8	-23.8	21.7
	10:12	-15.3	-18.5	-18.5	17.6	-17.3	-21.0	-21.0	19.4	-19.7	-23.8	-23.8	21.6
	11:12	-15.3	-18.6	-18.6	17.5	-17.4	-21.0	-21.0	19.3	-19.7	-23.9	-23.9	21.5
	12:12	-15.4	-18.6	-18.6	17.4	-17.4	-21.1	-21.1	19.2	-19.8	-23.9	-23.9	21.3

Side Load (psf)

	Roof Pitch	Ss = 0.0	Ss = 0.1	Ss = 0.2	Ss = 0.3	Ss = 0.4	Ss = 0.5	Ss = 1.0	Ss = 1.25	Ss = 1.5	Ss = 2.0	Ss = 2.5	Ss = 3.1
Down Slope	1:12	0.7	0.8	1.0	1.1	1.3	1.4	1.9	2.1	2.5	3.2	4.0	4.8
	2:12	1.4	1.4	1.6	1.7	1.9	2.0	2.4	2.6	2.9	3.6	4.3	5.2
	3:12	1.9	1.9	2.0	2.2	2.4	2.5	2.9	3.1	3.4	3.9	4.6	5.5
	4:12	2.4	2.4	2.5	2.6	2.8	2.9	3.3	3.5	3.8	4.3	4.9	5.8
	5:12	2.8	2.8	2.8	3.0	3.1	3.2	3.7	3.8	4.1	4.6	5.2	6.0
	6:12	3.1	3.1	3.1	3.2	3.4	3.5	3.9	4.1	4.3	4.9	5.4	6.2
	7:12	3.3	3.3	3.3	3.4	3.6	3.7	4.1	4.3	4.5	5.1	5.6	6.3
	8:12	3.4	3.4	3.4	3.6	3.7	3.8	4.3	4.4	4.7	5.2	5.7	6.5
	9:12	3.5	3.5	3.6	3.7	3.8	3.9	4.4	4.5	4.8	5.3	5.8	6.5
	10:12	3.6	3.6	3.6	3.8	3.9	4.0	4.4	4.6	4.8	5.3	5.8	6.6
	11:12	3.7	3.7	3.7	3.8	4.0	4.1	4.5	4.6	4.9	5.3	5.9	6.6
	12:12	3.7	3.7	3.7	3.9	4.0	4.1	4.5	4.6	4.9	5.3	5.9	6.7

Lateral

Ss = 0.0	Ss = 0.1	Ss = 0.2	Ss = 0.3	Ss = 0.4	Ss = 0.5	Ss = 1.0	Ss = 1.25	Ss = 1.5	Ss = 2.0	Ss = 2.5	Ss = 3.1
0.0	0.2	0.5	0.7	0.9	1.0	1.6	1.8	2.2	2.9	3.6	4.5

* These tables are meant as representative of the areas listed in the title. The local wind speeds and snow loads should be independantly verifed for the specific install location.

Southwest (Typical)*

APPENDIX - Pressure Tables for Flush Mounted Roof Systems

7-10
ASCE

115 mph Basic Wind Speed

5 psf Ground Snow Load

Up and Down (psf)

	Roof Pitch	Bldg. Height = 15 ft. Up Pressures (psf) Zone 1	Zone 2	Zone 3	Down (psf)	Bldg. Height = 30 ft. Up Pressures (psf) Zone 1	Zone 2	Zone 3	Down (psf)	Bldg. Height = 60 ft. Up Pressures (psf) Zone 1	Zone 2	Zone 3	Down (psf)
Exposure Category B	1:12	-10.8	-20.5	-32.6	14.8	-10.8	-20.5	-32.6	14.8	-13.4	-25.1	-39.8	14.8
	2:12	-9.6	-19.3	-30.2	14.4	-9.6	-19.3	-30.2	14.4	-11.9	-23.7	-36.9	14.4
	3:12	-9.6	-19.3	-30.2	14.0	-9.6	-19.3	-30.2	14.0	-12.0	-23.7	-36.9	14.0
	4:12	-9.7	-19.3	-30.2	13.5	-9.7	-19.3	-30.2	13.5	-12.0	-23.7	-36.9	13.5
	5:12	-9.7	-19.4	-30.2	13.2	-9.7	-19.4	-30.2	13.2	-12.0	-23.8	-37.0	13.2
	6:12	-9.7	-19.4	-30.3	13.0	-9.7	-19.4	-30.3	13.0	-12.1	-23.8	-37.0	13.0
	7:12	-11.0	-13.4	-13.4	14.2	-11.0	-13.4	-13.4	14.2	-13.6	-16.5	-16.5	16.5
	8:12	-11.0	-13.4	-13.4	14.1	-11.0	-13.4	-13.4	14.1	-13.6	-16.5	-16.5	16.4
	9:12	-11.1	-13.5	-13.5	14.0	-11.1	-13.5	-13.5	14.0	-13.6	-16.6	-16.6	16.3
	10:12	-11.1	-13.5	-13.5	13.8	-11.1	-13.5	-13.5	13.8	-13.7	-16.6	-16.6	16.2
	11:12	-11.1	-13.6	-13.6	13.7	-11.1	-13.6	-13.6	13.7	-13.7	-16.7	-16.7	16.0
	12:12	-11.2	-13.6	-13.6	13.6	-11.2	-13.6	-13.6	13.6	-13.8	-16.7	-16.7	15.9
Exposure Category C	1:12	-13.4	-25.1	-39.8	14.8	-15.6	-29.2	-46.1	14.8	-18.2	-33.8	-53.4	14.8
	2:12	-11.9	-23.7	-36.9	14.4	-14.0	-27.5	-42.7	14.4	-16.3	-31.9	-49.5	14.5
	3:12	-12.0	-23.7	-36.9	14.0	-14.0	-27.5	-42.7	14.0	-16.3	-31.9	-49.5	14.1
	4:12	-12.0	-23.7	-36.9	13.5	-14.0	-27.5	-42.8	13.5	-16.3	-32.0	-49.5	13.6
	5:12	-12.0	-23.8	-37.0	13.2	-14.0	-27.6	-42.8	13.2	-16.4	-32.0	-49.5	13.3
	6:12	-12.1	-23.8	-37.0	13.0	-14.1	-27.6	-42.8	13.0	-16.4	-32.0	-49.6	13.2
	7:12	-13.6	-16.5	-16.5	16.5	-15.8	-19.2	-19.2	18.6	-18.4	-22.3	-22.3	20.9
	8:12	-13.6	-16.5	-16.5	16.4	-15.9	-19.2	-19.2	18.4	-18.4	-22.3	-22.3	20.8
	9:12	-13.6	-16.6	-16.6	16.3	-15.9	-19.3	-19.3	18.3	-18.5	-22.4	-22.4	20.6
	10:12	-13.7	-16.6	-16.6	16.2	-15.9	-19.3	-19.3	18.2	-18.5	-22.4	-22.4	20.5
	11:12	-13.7	-16.7	-16.7	16.0	-16.0	-19.4	-19.4	18.1	-18.6	-22.5	-22.5	20.4
	12:12	-13.8	-16.7	-16.7	15.9	-16.0	-19.4	-19.4	17.9	-18.6	-22.5	-22.5	20.3
Exposure Category D	1:12	-16.5	-30.7	-48.5	14.8	-18.7	-34.8	-54.8	14.8	-21.3	-39.4	-62.1	14.8
	2:12	-14.7	-29.0	-45.0	14.4	-16.8	-32.8	-50.8	14.7	-19.1	-37.2	-57.5	15.7
	3:12	-14.8	-29.0	-45.0	14.0	-16.8	-32.8	-50.8	14.3	-19.1	-37.2	-57.6	15.3
	4:12	-14.8	-29.0	-45.0	13.5	-16.8	-32.8	-50.9	13.8	-19.1	-37.2	-57.6	15.0
	5:12	-14.8	-29.0	-45.1	13.2	-16.8	-32.9	-50.9	13.6	-19.2	-37.3	-57.6	14.9
	6:12	-14.9	-29.1	-45.1	13.0	-16.9	-32.9	-50.9	13.5	-19.2	-37.3	-57.7	14.8
	7:12	-16.7	-20.2	-20.2	19.3	-18.9	-22.9	-22.9	21.3	-21.5	-26.0	-26.0	23.7
	8:12	-16.7	-20.3	-20.3	19.2	-19.0	-23.0	-23.0	21.2	-21.6	-26.1	-26.1	23.6
	9:12	-16.8	-20.3	-20.3	19.1	-19.0	-23.0	-23.0	21.1	-21.6	-26.1	-26.1	23.4
	10:12	-16.8	-20.4	-20.4	19.0	-19.0	-23.0	-23.0	21.0	-21.6	-26.2	-26.2	23.3
	11:12	-16.8	-20.4	-20.4	18.8	-19.1	-23.1	-23.1	20.9	-21.7	-26.2	-26.2	23.2
	12:12	-16.9	-20.4	-20.4	18.7	-19.1	-23.1	-23.1	20.7	-21.7	-26.2	-26.2	23.1

Side Load (psf)

	Roof Pitch	Ss = 0.0	Ss = 0.1	Ss = 0.2	Ss = 0.3	Ss = 0.4	Ss = 0.5	Ss = 1.0	Ss = 1.25	Ss = 1.5	Ss = 2.0	Ss = 2.5	Ss = 3.1
Down Slope	1:12	0.7	0.8	1.0	1.1	1.3	1.4	1.9	2.1	2.5	3.2	4.0	4.8
	2:12	1.4	1.4	1.6	1.7	1.9	2.0	2.4	2.6	2.9	3.6	4.3	5.2
	3:12	1.9	1.9	2.0	2.2	2.4	2.5	2.9	3.1	3.4	3.9	4.6	5.5
	4:12	2.4	2.4	2.5	2.6	2.8	2.9	3.3	3.5	3.8	4.3	4.9	5.8
	5:12	2.8	2.8	2.8	3.0	3.1	3.2	3.7	3.8	4.1	4.6	5.2	6.0
	6:12	3.1	3.1	3.1	3.2	3.4	3.5	3.9	4.1	4.3	4.9	5.4	6.2
	7:12	3.3	3.3	3.3	3.4	3.6	3.7	4.1	4.3	4.5	5.1	5.6	6.3
	8:12	3.4	3.4	3.4	3.6	3.7	3.8	4.3	4.4	4.7	5.2	5.7	6.5
	9:12	3.5	3.5	3.6	3.7	3.8	3.9	4.4	4.5	4.8	5.3	5.8	6.5
	10:12	3.6	3.6	3.6	3.8	3.9	4.0	4.4	4.6	4.8	5.3	5.8	6.6
	11:12	3.7	3.7	3.7	3.8	4.0	4.1	4.5	4.6	4.9	5.3	5.9	6.6
	12:12	3.7	3.7	3.7	3.9	4.0	4.1	4.5	4.6	4.9	5.3	5.9	6.7

Lateral

Ss = 0.0	Ss = 0.1	Ss = 0.2	Ss = 0.3	Ss = 0.4	Ss = 0.5	Ss = 1.0	Ss = 1.25	Ss = 1.5	Ss = 2.0	Ss = 2.5	Ss = 3.1
0.0	0.2	0.5	0.7	0.9	1.0	1.6	1.8	2.2	2.9	3.6	4.5

* These tables are meant as representative of the areas listed in the title. The local wind speeds and snow loads should be independantly verifed for the specific install location.

Mid US (Medium Snow)*

APPENDIX - Pressure Tables for Flush Mounted Roof Systems

7-10
ASCE

115 mph
Basic Wind Speed

25 psf
Ground Snow Load

Up and Down (psf)

	Roof Pitch	Bldg. Height = 15 ft. Up Pressures (psf) Zone 1	Zone 2	Zone 3	Down (psf)	Bldg. Height = 30 ft. Up Pressures (psf) Zone 1	Zone 2	Zone 3	Down (psf)	Bldg. Height = 60 ft. Up Pressures (psf) Zone 1	Zone 2	Zone 3	Down (psf)
Exposure Category B	1:12	-10.8	-20.5	-32.6	25.9	-10.8	-20.5	-32.6	25.9	-13.4	-25.1	-39.8	25.9
	2:12	-9.6	-19.3	-30.2	24.6	-9.6	-19.3	-30.2	24.6	-11.9	-23.7	-36.9	24.6
	3:12	-9.6	-19.3	-30.2	23.1	-9.6	-19.3	-30.2	23.1	-12.0	-23.7	-36.9	23.1
	4:12	-9.7	-19.3	-30.2	21.6	-9.7	-19.3	-30.2	21.6	-12.0	-23.7	-36.9	21.6
	5:12	-9.7	-19.4	-30.2	20.1	-9.7	-19.4	-30.2	20.1	-12.0	-23.8	-37.0	20.1
	6:12	-9.7	-19.4	-30.3	18.7	-9.7	-19.4	-30.3	18.7	-12.1	-23.8	-37.0	18.7
	7:12	-11.0	-13.4	-13.4	18.3	-11.0	-13.4	-13.4	18.3	-13.6	-16.5	-16.5	20.1
	8:12	-11.0	-13.4	-13.4	17.2	-11.0	-13.4	-13.4	17.2	-13.6	-16.5	-16.5	18.9
	9:12	-11.1	-13.5	-13.5	16.1	-11.1	-13.5	-13.5	16.1	-13.6	-16.6	-16.6	17.9
	10:12	-11.1	-13.5	-13.5	15.2	-11.1	-13.5	-13.5	15.2	-13.7	-16.6	-16.6	17.0
	11:12	-11.1	-13.6	-13.6	14.4	-11.1	-13.6	-13.6	14.4	-13.7	-16.7	-16.7	16.2
	12:12	-11.2	-13.6	-13.6	13.8	-11.2	-13.6	-13.6	13.8	-13.8	-16.7	-16.7	15.9
Exposure Category C	1:12	-13.4	-25.1	-39.8	25.9	-15.6	-29.2	-46.1	25.9	-18.2	-33.8	-53.4	25.9
	2:12	-11.9	-23.7	-36.9	24.6	-14.0	-27.5	-42.7	24.6	-16.3	-31.9	-49.5	24.7
	3:12	-12.0	-23.7	-36.9	23.1	-14.0	-27.5	-42.7	23.1	-16.3	-31.9	-49.5	23.2
	4:12	-12.0	-23.7	-36.9	21.6	-14.0	-27.5	-42.8	21.6	-16.3	-32.0	-49.5	21.7
	5:12	-12.0	-23.8	-37.0	20.1	-14.0	-27.6	-42.8	20.1	-16.4	-32.0	-49.5	20.2
	6:12	-12.1	-23.8	-37.0	18.7	-14.1	-27.6	-42.8	18.7	-16.4	-32.0	-49.6	18.8
	7:12	-13.6	-16.5	-16.5	20.1	-15.8	-19.2	-19.2	21.6	-18.4	-22.3	-22.3	23.3
	8:12	-13.6	-16.5	-16.5	18.9	-15.9	-19.2	-19.2	20.4	-18.4	-22.3	-22.3	22.2
	9:12	-13.6	-16.6	-16.6	17.9	-15.9	-19.3	-19.3	19.4	-18.5	-22.4	-22.4	21.1
	10:12	-13.7	-16.6	-16.6	17.0	-15.9	-19.3	-19.3	18.5	-18.5	-22.4	-22.4	20.5
	11:12	-13.7	-16.7	-16.7	16.2	-16.0	-19.4	-19.4	18.1	-18.6	-22.5	-22.5	20.4
	12:12	-13.8	-16.7	-16.7	15.9	-16.0	-19.4	-19.4	17.9	-18.6	-22.5	-22.5	20.3
Exposure Category D	1:12	-16.5	-30.7	-48.5	25.9	-18.7	-34.8	-54.8	25.9	-21.3	-39.4	-62.1	25.9
	2:12	-14.7	-29.0	-45.0	24.6	-16.8	-32.8	-50.8	24.9	-19.1	-37.2	-57.5	25.9
	3:12	-14.8	-29.0	-45.0	23.1	-16.8	-32.8	-50.8	23.4	-19.1	-37.2	-57.6	24.4
	4:12	-14.8	-29.0	-45.0	21.6	-16.8	-32.8	-50.9	21.9	-19.1	-37.2	-57.6	22.8
	5:12	-14.8	-29.0	-45.1	20.1	-16.8	-32.9	-50.9	20.4	-19.2	-37.3	-57.6	21.4
	6:12	-14.9	-29.1	-45.1	18.7	-16.9	-32.9	-50.9	19.0	-19.2	-37.3	-57.7	19.9
	7:12	-16.7	-20.2	-20.2	22.2	-18.9	-22.9	-22.9	23.7	-21.5	-26.0	-26.0	25.4
	8:12	-16.7	-20.3	-20.3	21.0	-19.0	-23.0	-23.0	22.5	-21.6	-26.1	-26.1	24.3
	9:12	-16.8	-20.3	-20.3	20.0	-19.0	-23.0	-23.0	21.5	-21.6	-26.1	-26.1	23.4
	10:12	-16.8	-20.4	-20.4	19.1	-19.0	-23.0	-23.0	21.0	-21.6	-26.2	-26.2	23.3
	11:12	-16.8	-20.4	-20.4	18.8	-19.1	-23.1	-23.1	20.9	-21.7	-26.2	-26.2	23.2
	12:12	-16.9	-20.4	-20.4	18.7	-19.1	-23.1	-23.1	20.7	-21.7	-26.2	-26.2	23.1

Side Load (psf)

	Roof Pitch	Ss = 0.0	Ss = 0.1	Ss = 0.2	Ss = 0.3	Ss = 0.4	Ss = 0.5	Ss = 1.0	Ss = 1.25	Ss = 1.5	Ss = 2.0	Ss = 2.5	Ss = 3.1
Down Slope	1:12	2.0	2.0	2.0	2.1	2.2	2.3	2.8	2.9	3.2	3.8	4.3	5.0
	2:12	3.7	3.7	3.7	3.7	3.7	3.7	4.1	4.3	4.6	5.1	5.7	6.3
	3:12	5.0	5.0	5.0	5.0	5.0	5.0	5.2	5.4	5.6	6.2	6.7	7.4
	4:12	6.0	6.0	6.0	6.0	6.0	6.0	6.0	6.2	6.4	7.0	7.6	8.2
	5:12	6.7	6.7	6.7	6.7	6.7	6.7	6.7	6.7	7.0	7.6	8.1	8.8
	6:12	7.1	7.1	7.1	7.1	7.1	7.1	7.1	7.1	7.4	7.9	8.4	9.1
	7:12	7.3	7.3	7.3	7.3	7.3	7.3	7.3	7.3	7.5	8.1	8.6	9.2
	8:12	7.3	7.3	7.3	7.3	7.3	7.3	7.3	7.3	7.6	8.1	8.6	9.2
	9:12	7.2	7.2	7.2	7.2	7.2	7.2	7.2	7.3	7.5	8.0	8.5	9.2
	10:12	7.0	7.0	7.0	7.0	7.0	7.0	7.0	7.1	7.4	7.9	8.4	9.0
	11:12	6.8	6.8	6.8	6.8	6.8	6.8	6.8	7.0	7.2	7.7	8.2	8.8
	12:12	6.6	6.6	6.6	6.6	6.6	6.6	6.7	6.8	7.0	7.5	8.0	8.6

Lateral

Ss = 0.0	Ss = 0.1	Ss = 0.2	Ss = 0.3	Ss = 0.4	Ss = 0.5	Ss = 1.0	Ss = 1.25	Ss = 1.5	Ss = 2.0	Ss = 2.5	Ss = 3.1
0.0	0.2	0.5	0.7	0.9	1.0	1.6	1.8	2.2	2.9	3.6	4.5

* These tables are meant as representative of the areas listed in the title. The local wind speeds and snow loads should be independantly verifed for the specific install location.

Massachusetts (Typical)*

APPENDIX - Pressure Tables for Flush Mounted Roof Systems

7-10 ASCE

115 mph Basic Wind Speed

40 psf Ground Snow Load

SM SOLAR MOUNT

APPENDIX B

Pressure Lookup Tables

Up and Down (psf)

	Roof Pitch	Bldg. Height = 15 ft. Up Pressures (psf) Zone 1	Zone 2	Zone 3	Down (psf)	Bldg. Height = 30 ft. Up Pressures (psf) Zone 1	Zone 2	Zone 3	Down (psf)	Bldg. Height = 60 ft. Up Pressures (psf) Zone 1	Zone 2	Zone 3	Down (psf)
Exposure Category B	1:12	-10.8	-20.5	-32.6	31.9	-10.8	-20.5	-32.6	31.9	-13.4	-25.1	-39.8	31.9
	2:12	-9.6	-19.3	-30.2	30.0	-9.6	-19.3	-30.2	30.0	-11.9	-23.7	-36.9	30.0
	3:12	-9.6	-19.3	-30.2	27.9	-9.6	-19.3	-30.2	27.9	-12.0	-23.7	-36.9	27.9
	4:12	-9.7	-19.3	-30.2	25.8	-9.7	-19.3	-30.2	25.8	-12.0	-23.7	-36.9	25.8
	5:12	-9.7	-19.4	-30.2	23.8	-9.7	-19.4	-30.2	23.8	-12.0	-23.8	-37.0	23.8
	6:12	-9.7	-19.4	-30.3	21.9	-9.7	-19.4	-30.3	21.9	-12.1	-23.8	-37.0	21.9
	7:12	-11.0	-13.4	-13.4	21.1	-11.0	-13.4	-13.4	21.1	-13.6	-16.5	-16.5	22.8
	8:12	-11.0	-13.4	-13.4	19.5	-11.0	-13.4	-13.4	19.5	-13.6	-16.5	-16.5	21.2
	9:12	-11.1	-13.5	-13.5	18.1	-11.1	-13.5	-13.5	18.1	-13.6	-16.6	-16.6	19.8
	10:12	-11.1	-13.5	-13.5	16.9	-11.1	-13.5	-13.5	16.9	-13.7	-16.6	-16.6	18.6
	11:12	-11.1	-13.6	-13.6	15.8	-11.1	-13.6	-13.6	15.8	-13.7	-16.7	-16.7	17.6
	12:12	-11.2	-13.6	-13.6	14.9	-11.2	-13.6	-13.6	14.9	-13.8	-16.7	-16.7	16.7
Exposure Category C	1:12	-13.4	-25.1	-39.8	31.9	-15.6	-29.2	-46.1	31.9	-18.2	-33.8	-53.4	31.9
	2:12	-11.9	-23.7	-36.9	30.0	-14.0	-27.5	-42.7	30.0	-16.3	-31.9	-49.5	30.1
	3:12	-12.0	-23.7	-36.9	27.9	-14.0	-27.5	-42.7	27.9	-16.3	-31.9	-49.5	28.1
	4:12	-12.0	-23.7	-36.9	25.8	-14.0	-27.5	-42.8	25.8	-16.3	-32.0	-49.5	26.0
	5:12	-12.0	-23.8	-37.0	23.8	-14.0	-27.6	-42.8	23.8	-16.4	-32.0	-49.5	23.9
	6:12	-12.1	-23.8	-37.0	21.9	-14.1	-27.6	-42.8	21.9	-16.4	-32.0	-49.6	22.0
	7:12	-13.6	-16.5	-16.5	22.8	-15.8	-19.2	-19.2	24.3	-18.4	-22.3	-22.3	26.1
	8:12	-13.6	-16.5	-16.5	21.2	-15.9	-19.2	-19.2	22.7	-18.4	-22.3	-22.3	24.5
	9:12	-13.6	-16.6	-16.6	19.8	-15.9	-19.3	-19.3	21.4	-18.5	-22.4	-22.4	23.1
	10:12	-13.7	-16.6	-16.6	18.6	-15.9	-19.3	-19.3	20.1	-18.5	-22.4	-22.4	21.9
	11:12	-13.7	-16.7	-16.7	17.6	-16.0	-19.4	-19.4	19.1	-18.6	-22.5	-22.5	20.8
	12:12	-13.8	-16.7	-16.7	16.7	-16.0	-19.4	-19.4	18.2	-18.6	-22.5	-22.5	20.3
Exposure Category D	1:12	-16.5	-30.7	-48.5	29.8	-18.7	-34.8	-54.8	29.8	-21.3	-39.4	-62.1	29.8
	2:12	-14.7	-29.0	-45.0	28.1	-16.8	-32.8	-50.8	28.4	-19.1	-37.2	-57.5	29.4
	3:12	-14.8	-29.0	-45.0	26.2	-16.8	-32.8	-50.8	26.6	-19.1	-37.2	-57.6	27.5
	4:12	-14.8	-29.0	-45.0	24.3	-16.8	-32.8	-50.9	24.7	-19.1	-37.2	-57.6	25.6
	5:12	-14.8	-29.0	-45.1	22.5	-16.8	-32.9	-50.9	22.8	-19.2	-37.3	-57.6	23.8
	6:12	-14.9	-29.1	-45.1	20.7	-16.9	-32.9	-50.9	21.1	-19.2	-37.3	-57.7	22.0
	7:12	-16.7	-20.2	-20.2	24.0	-18.9	-22.9	-22.9	25.5	-21.5	-26.0	-26.0	27.2
	8:12	-16.7	-20.3	-20.3	22.5	-19.0	-23.0	-23.0	24.0	-21.6	-26.1	-26.1	25.8
	9:12	-16.8	-20.3	-20.3	21.2	-19.0	-23.0	-23.0	22.8	-21.6	-26.1	-26.1	24.5
	10:12	-16.8	-20.4	-20.4	20.1	-19.0	-23.0	-23.0	21.7	-21.6	-26.2	-26.2	23.4
	11:12	-16.8	-20.4	-20.4	19.2	-19.1	-23.1	-23.1	20.9	-21.7	-26.2	-26.2	23.2
	12:12	-16.9	-20.4	-20.4	18.7	-19.1	-23.1	-23.1	20.7	-21.7	-26.2	-26.2	23.1

Side Load (psf)

Down Slope	Roof Pitch	Ss = 0.0	Ss = 0.1	Ss = 0.2	Ss = 0.3	Ss = 0.4	Ss = 0.5	Ss = 1.0	Ss = 1.25	Ss = 1.5	Ss = 2.0	Ss = 2.5	Ss = 3.1
	1:12	2.6	2.6	2.6	2.6	2.7	2.8	3.3	3.4	3.7	4.2	4.8	5.5
	2:12	4.9	4.9	4.9	4.9	4.9	4.9	5.0	5.2	5.5	6.0	6.6	7.2
	3:12	6.6	6.6	6.6	6.6	6.6	6.6	6.6	6.6	6.9	7.4	8.0	8.6
	4:12	7.9	7.9	7.9	7.9	7.9	7.9	7.9	7.9	7.9	8.4	9.0	9.6
	5:12	8.7	8.7	8.7	8.7	8.7	8.7	8.7	8.7	8.7	9.1	9.7	10.3
	6:12	9.2	9.2	9.2	9.2	9.2	9.2	9.2	9.2	9.2	9.5	10.0	10.7
	7:12	9.4	9.4	9.4	9.4	9.4	9.4	9.4	9.4	9.4	9.7	10.2	10.8
	8:12	9.4	9.4	9.4	9.4	9.4	9.4	9.4	9.4	9.4	9.6	10.2	10.8
	9:12	9.2	9.2	9.2	9.2	9.2	9.2	9.2	9.2	9.2	9.5	10.0	10.6
	10:12	8.9	8.9	8.9	8.9	8.9	8.9	8.9	8.9	8.9	9.3	9.8	10.4
	11:12	8.5	8.5	8.5	8.5	8.5	8.5	8.5	8.5	8.5	9.0	9.5	10.0
	12:12	8.1	8.1	8.1	8.1	8.1	8.1	8.1	8.1	8.2	8.7	9.1	9.7

Lateral

Ss = 0.0	Ss = 0.1	Ss = 0.2	Ss = 0.3	Ss = 0.4	Ss = 0.5	Ss = 1.0	Ss = 1.25	Ss = 1.5	Ss = 2.0	Ss = 2.5	Ss = 3.1
0.0	0.2	0.5	0.7	0.9	1.0	1.6	1.8	2.2	2.9	3.6	4.5

* These tables are meant as representative of the areas listed in the title. The local wind speeds and snow loads should be independantly verifed for the specific install location.

Mid US (High Snow)*

APPENDIX - Pressure Tables for Flush Mounted Roof Systems

7-10
ASCE

115 mph
Basic Wind Speed

60 psf
Ground Snow Load

Up and Down (psf)

		Bldg. Height = 15 ft.				Bldg. Height = 30 ft.				Bldg. Height = 60 ft.			
		Up Pressures (psf)			Down	Up Pressures (psf)			Down	Up Pressures (psf)			Down
	Roof Pitch	Zone 1	Zone 2	Zone 3	(psf)	Zone 1	Zone 2	Zone 3	(psf)	Zone 1	Zone 2	Zone 3	(psf)
Exposure Category B	1:12	-10.8	-20.5	-32.6	45.5	-10.8	-20.5	-32.6	45.5	-13.4	-25.1	-39.8	45.5
	2:12	-9.6	-19.3	-30.2	41.9	-9.6	-19.3	-30.2	41.9	-11.9	-23.7	-36.9	41.9
	3:12	-9.6	-19.3	-30.2	37.8	-9.6	-19.3	-30.2	37.8	-12.0	-23.7	-36.9	37.8
	4:12	-9.7	-19.3	-30.2	33.6	-9.7	-19.3	-30.2	33.6	-12.0	-23.7	-36.9	33.6
	5:12	-9.7	-19.4	-30.2	30.3	-9.7	-19.4	-30.2	30.3	-12.0	-23.8	-37.0	30.3
	6:12	-9.7	-19.4	-30.3	27.5	-9.7	-19.4	-30.3	27.5	-12.1	-23.8	-37.0	27.5
	7:12	-11.0	-13.4	-13.4	25.9	-11.0	-13.4	-13.4	25.9	-13.6	-16.5	-16.5	27.6
	8:12	-11.0	-13.4	-13.4	23.5	-11.0	-13.4	-13.4	23.5	-13.6	-16.5	-16.5	25.3
	9:12	-11.1	-13.5	-13.5	21.5	-11.1	-13.5	-13.5	21.5	-13.6	-16.6	-16.6	23.3
	10:12	-11.1	-13.5	-13.5	19.7	-11.1	-13.5	-13.5	19.7	-13.7	-16.6	-16.6	21.5
	11:12	-11.1	-13.6	-13.6	18.2	-11.1	-13.6	-13.6	18.2	-13.7	-16.7	-16.7	20.0
	12:12	-11.2	-13.6	-13.6	16.9	-11.2	-13.6	-13.6	16.9	-13.8	-16.7	-16.7	18.7
Exposure Category C	1:12	-13.4	-25.1	-39.8	45.5	-15.6	-29.2	-46.1	45.5	-18.2	-33.8	-53.4	45.5
	2:12	-11.9	-23.7	-36.9	41.9	-14.0	-27.5	-42.7	41.9	-16.3	-31.9	-49.5	41.9
	3:12	-12.0	-23.7	-36.9	37.8	-14.0	-27.5	-42.7	37.8	-16.3	-31.9	-49.5	37.8
	4:12	-12.0	-23.7	-36.9	33.6	-14.0	-27.5	-42.8	33.6	-16.3	-32.0	-49.5	33.6
	5:12	-12.0	-23.8	-37.0	30.3	-14.0	-27.6	-42.8	30.3	-16.4	-32.0	-49.5	30.4
	6:12	-12.1	-23.8	-37.0	27.5	-14.1	-27.6	-42.8	27.5	-16.4	-32.0	-49.6	27.6
	7:12	-13.6	-16.5	-16.5	27.6	-15.8	-19.2	-19.2	29.1	-18.4	-22.3	-22.3	30.9
	8:12	-13.6	-16.5	-16.5	25.3	-15.9	-19.2	-19.2	26.8	-18.4	-22.3	-22.3	28.6
	9:12	-13.6	-16.6	-16.6	23.3	-15.9	-19.3	-19.3	24.8	-18.5	-22.4	-22.4	26.5
	10:12	-13.7	-16.6	-16.6	21.5	-15.9	-19.3	-19.3	23.0	-18.5	-22.4	-22.4	24.8
	11:12	-13.7	-16.7	-16.7	20.0	-16.0	-19.4	-19.4	21.5	-18.6	-22.5	-22.5	23.2
	12:12	-13.8	-16.7	-16.7	18.7	-16.0	-19.4	-19.4	20.2	-18.6	-22.5	-22.5	21.9
Exposure Category D	1:12	-16.5	-30.7	-48.5	41.4	-18.7	-34.8	-54.8	41.4	-21.3	-39.4	-62.1	41.4
	2:12	-14.7	-29.0	-45.0	38.0	-16.8	-32.8	-50.8	38.0	-19.1	-37.2	-57.5	38.0
	3:12	-14.8	-29.0	-45.0	34.4	-16.8	-32.8	-50.8	34.4	-19.1	-37.2	-57.6	35.2
	4:12	-14.8	-29.0	-45.0	31.1	-16.8	-32.8	-50.9	31.4	-19.1	-37.2	-57.6	32.4
	5:12	-14.8	-29.0	-45.1	28.4	-16.8	-32.9	-50.9	28.7	-19.2	-37.3	-57.6	29.6
	6:12	-14.9	-29.1	-45.1	25.8	-16.9	-32.9	-50.9	26.1	-19.2	-37.3	-57.7	27.1
	7:12	-16.7	-20.2	-20.2	28.3	-18.9	-22.9	-22.9	29.8	-21.5	-26.0	-26.0	31.5
	8:12	-16.7	-20.3	-20.3	26.2	-19.0	-23.0	-23.0	27.7	-21.6	-26.1	-26.1	29.4
	9:12	-16.8	-20.3	-20.3	24.3	-19.0	-23.0	-23.0	25.8	-21.6	-26.1	-26.1	27.6
	10:12	-16.8	-20.4	-20.4	22.7	-19.0	-23.0	-23.0	24.2	-21.6	-26.2	-26.2	26.0
	11:12	-16.8	-20.4	-20.4	21.4	-19.1	-23.1	-23.1	22.9	-21.7	-26.2	-26.2	24.6
	12:12	-16.9	-20.4	-20.4	20.2	-19.1	-23.1	-23.1	21.7	-21.7	-26.2	-26.2	23.4

Side Load (psf)

	Roof Pitch	Ss = 0.0	Ss = 0.1	Ss = 0.2	Ss = 0.3	Ss = 0.4	Ss = 0.5	Ss = 1.0	Ss = 1.25	Ss = 1.5	Ss = 2.0	Ss = 2.5	Ss = 3.1
Down Slope	1:12	3.8	3.8	4.0	4.6	5.0	5.4	6.8	7.3	8.2	9.9	11.9	14.7
	2:12	7.0	7.0	7.0	7.0	7.4	7.7	9.1	9.6	10.4	12.1	13.8	15.8
	3:12	9.4	9.4	9.4	9.4	9.4	9.6	10.8	11.3	12.1	13.7	15.3	17.2
	4:12	11.2	11.2	11.2	11.2	11.2	11.2	12.0	12.5	13.3	14.8	16.3	18.1
	5:12	12.3	12.3	12.3	12.3	12.3	12.3	12.8	13.2	13.9	15.3	16.7	18.5
	6:12	12.9	12.9	12.9	12.9	12.9	12.9	13.1	13.5	14.1	15.5	16.8	18.4
	7:12	13.1	13.1	13.1	13.1	13.1	13.1	13.1	13.4	14.1	15.3	16.5	18.0
	8:12	13.0	13.0	13.0	13.0	13.0	13.0	13.0	13.2	13.7	14.9	16.1	17.5
	9:12	12.6	12.6	12.6	12.6	12.6	12.6	12.6	12.7	13.3	14.3	15.4	16.7
	10:12	12.1	12.1	12.1	12.1	12.1	12.1	12.1	12.2	12.7	13.7	14.7	15.9
	11:12	11.4	11.4	11.4	11.4	11.4	11.4	11.4	11.6	12.1	13.0	13.9	15.1
	12:12	10.8	10.8	10.8	10.8	10.8	10.8	10.8	11.0	11.4	12.3	13.2	14.2

Lateral

Ss = 0.0	Ss = 0.1	Ss = 0.2	Ss = 0.3	Ss = 0.4	Ss = 0.5	Ss = 1.0	Ss = 1.25	Ss = 1.5	Ss = 2.0	Ss = 2.5	Ss = 3.1
0.0	0.7	1.5	2.1	2.7	3.2	5.0	5.7	6.9	9.1	11.4	14.2

* These tables are meant as representative of the areas listed in the title. The local wind speeds and snow loads should be independantly verifed for the specific install location.

East Coast (Medium Snow)*

APPENDIX - Pressure Tables for Flush Mounted Roof Systems

7-10 ASCE

120 mph Basic Wind Speed

25 psf Ground Snow Load

SM SOLAR MOUNT

APPENDIX B

Pressure Lookup Tables

		Bldg. Height = 15 ft.				Bldg. Height = 30 ft.				Bldg. Height = 60 ft.			
		Up Pressures (psf)			Down	Up Pressures (psf)			Down	Up Pressures (psf)			Down
	Roof Pitch	Zone 1	Zone 2	Zone 3	(psf)	Zone 1	Zone 2	Zone 3	(psf)	Zone 1	Zone 2	Zone 3	(psf)
Exposure Category B	1:12	-11.9	-22.4	-35.6	25.9	-11.9	-22.4	-35.6	25.9	-14.7	-27.5	-43.5	25.9
	2:12	-10.6	-21.1	-33.0	24.6	-10.6	-21.1	-33.0	24.6	-13.1	-25.9	-40.3	24.6
	3:12	-10.6	-21.1	-33.0	23.1	-10.6	-21.1	-33.0	23.1	-13.1	-25.9	-40.3	23.1
	4:12	-10.6	-21.2	-33.0	21.6	-10.6	-21.2	-33.0	21.6	-13.2	-25.9	-40.3	21.6
	5:12	-10.7	-21.2	-33.0	20.1	-10.7	-21.2	-33.0	20.1	-13.2	-26.0	-40.4	20.1
	6:12	-10.7	-21.2	-33.1	18.7	-10.7	-21.2	-33.1	18.7	-13.2	-26.0	-40.4	18.7
	7:12	-12.1	-14.7	-14.7	19.0	-12.1	-14.7	-14.7	19.0	-14.9	-18.1	-18.1	21.0
	8:12	-12.1	-14.7	-14.7	17.9	-12.1	-14.7	-14.7	17.9	-14.9	-18.1	-18.1	19.8
	9:12	-12.1	-14.8	-14.8	16.9	-12.1	-14.8	-14.8	16.9	-15.0	-18.1	-18.1	18.8
	10:12	-12.2	-14.8	-14.8	16.0	-12.2	-14.8	-14.8	16.0	-15.0	-18.2	-18.2	17.9
	11:12	-12.2	-14.8	-14.8	15.2	-12.2	-14.8	-14.8	15.2	-15.0	-18.2	-18.2	17.2
	12:12	-12.3	-14.9	-14.9	14.6	-12.3	-14.9	-14.9	14.6	-15.1	-18.3	-18.3	17.1
Exposure Category C	1:12	-14.7	-27.5	-43.5	25.9	-17.1	-31.9	-50.3	25.9	-20.0	-37.0	-58.2	25.9
	2:12	-13.1	-25.9	-40.3	24.6	-15.3	-30.1	-46.6	24.6	-17.9	-34.8	-54.0	25.4
	3:12	-13.1	-25.9	-40.3	23.1	-15.3	-30.1	-46.7	23.1	-17.9	-34.9	-54.0	23.9
	4:12	-13.2	-25.9	-40.3	21.6	-15.4	-30.1	-46.7	21.6	-17.9	-34.9	-54.0	22.3
	5:12	-13.2	-26.0	-40.4	20.1	-15.4	-30.1	-46.7	20.1	-17.9	-34.9	-54.1	20.8
	6:12	-13.2	-26.0	-40.4	18.7	-15.4	-30.2	-46.8	18.7	-18.0	-35.0	-54.1	19.4
	7:12	-14.9	-18.1	-18.1	21.0	-17.3	-21.0	-21.0	22.6	-20.1	-24.4	-24.4	24.5
	8:12	-14.9	-18.1	-18.1	19.8	-17.4	-21.0	-21.0	21.4	-20.2	-24.4	-24.4	23.3
	9:12	-15.0	-18.1	-18.1	18.8	-17.4	-21.1	-21.1	20.4	-20.2	-24.5	-24.5	22.3
	10:12	-15.0	-18.2	-18.2	17.9	-17.4	-21.1	-21.1	19.5	-20.3	-24.5	-24.5	22.1
	11:12	-15.0	-18.2	-18.2	17.2	-17.5	-21.2	-21.2	19.4	-20.3	-24.5	-24.5	22.0
	12:12	-15.1	-18.3	-18.3	17.1	-17.5	-21.2	-21.2	19.3	-20.3	-24.6	-24.6	21.8
Exposure Category D	1:12	-18.1	-33.6	-52.9	25.9	-20.5	-38.0	-59.8	25.9	-23.3	-43.1	-67.7	25.9
	2:12	-16.2	-31.7	-49.1	24.6	-18.4	-35.8	-55.4	25.6	-20.9	-40.6	-62.8	26.6
	3:12	-16.2	-31.7	-49.1	23.1	-18.4	-35.8	-55.5	24.1	-20.9	-40.6	-62.8	25.1
	4:12	-16.2	-31.7	-49.1	21.6	-18.4	-35.9	-55.5	22.5	-20.9	-40.7	-62.8	23.6
	5:12	-16.2	-31.7	-49.2	20.1	-18.4	-35.9	-55.5	21.0	-21.0	-40.7	-62.8	22.1
	6:12	-16.3	-31.8	-49.2	18.7	-18.5	-35.9	-55.6	19.6	-21.0	-40.7	-62.9	20.7
	7:12	-18.3	-22.1	-22.1	23.2	-20.7	-25.1	-25.1	24.9	-23.5	-28.4	-28.4	26.8
	8:12	-18.3	-22.2	-22.2	22.1	-20.7	-25.1	-25.1	23.7	-23.6	-28.5	-28.5	25.6
	9:12	-18.3	-22.2	-22.2	21.0	-20.8	-25.1	-25.1	22.7	-23.6	-28.5	-28.5	25.2
	10:12	-18.4	-22.3	-22.3	20.4	-20.8	-25.2	-25.2	22.6	-23.6	-28.6	-28.6	25.1
	11:12	-18.4	-22.3	-22.3	20.3	-20.9	-25.2	-25.2	22.5	-23.7	-28.6	-28.6	25.0
	12:12	-18.5	-22.3	-22.3	20.1	-20.9	-25.3	-25.3	22.3	-23.7	-28.6	-28.6	24.9

Up and Down (psf)

Down Slope	Roof Pitch	Ss = 0.0	Ss = 0.1	Ss = 0.2	Ss = 0.3	Ss = 0.4	Ss = 0.5	Ss = 1.0	Ss = 1.25	Ss = 1.5	Ss = 2.0	Ss = 2.5	Ss = 3.1
	1:12	2.0	2.0	2.0	2.1	2.2	2.3	2.8	2.9	3.2	3.8	4.3	5.0
	2:12	3.7	3.7	3.7	3.7	3.7	3.7	4.1	4.3	4.6	5.1	5.7	6.3
	3:12	5.0	5.0	5.0	5.0	5.0	5.0	5.2	5.4	5.6	6.2	6.7	7.4
	4:12	6.0	6.0	6.0	6.0	6.0	6.0	6.0	6.2	6.4	7.0	7.6	8.2
	5:12	6.7	6.7	6.7	6.7	6.7	6.7	6.7	6.7	7.0	7.6	8.1	8.8
	6:12	7.1	7.1	7.1	7.1	7.1	7.1	7.1	7.1	7.4	7.9	8.4	9.1
	7:12	7.3	7.3	7.3	7.3	7.3	7.3	7.3	7.3	7.5	8.1	8.6	9.2
	8:12	7.3	7.3	7.3	7.3	7.3	7.3	7.3	7.3	7.6	8.1	8.6	9.2
	9:12	7.2	7.2	7.2	7.2	7.2	7.2	7.2	7.3	7.5	8.0	8.5	9.2
	10:12	7.0	7.0	7.0	7.0	7.0	7.0	7.0	7.1	7.4	7.9	8.4	9.0
	11:12	6.8	6.8	6.8	6.8	6.8	6.8	6.8	7.0	7.2	7.7	8.2	8.8
	12:12	6.6	6.6	6.6	6.6	6.6	6.6	6.7	6.8	7.0	7.5	8.0	8.6

Side Load (psf)

Lateral	Ss = 0.0	Ss = 0.1	Ss = 0.2	Ss = 0.3	Ss = 0.4	Ss = 0.5	Ss = 1.0	Ss = 1.25	Ss = 1.5	Ss = 2.0	Ss = 2.5	Ss = 3.1
	0.0	0.2	0.5	0.7	0.9	1.0	1.6	1.8	2.2	2.9	3.6	4.5

* These tables are meant as representative of the areas listed in the title. The local wind speeds and snow loads should be independantly verifed for the specific install location.

East Coast (Low Snow)*

APPENDIX - Pressure Tables for Flush Mounted Roof Systems

7-10 ASCE

130 mph Basic Wind Speed

10 psf Ground Snow Load

SM SOLAR MOUNT

APPENDIX B

Pressure Lookup Tables

Up and Down (psf)

	Roof Pitch	Bldg. Height = 15 ft. Up Pressures (psf) Zone 1	Zone 2	Zone 3	Down (psf)	Bldg. Height = 30 ft. Up Pressures (psf) Zone 1	Zone 2	Zone 3	Down (psf)	Bldg. Height = 60 ft. Up Pressures (psf) Zone 1	Zone 2	Zone 3	Down (psf)
Exposure Category B	1:12	-14.2	-26.5	-42.0	18.5	-14.2	-26.5	-42.0	18.5	-17.5	-32.5	-51.2	18.5
	2:12	-12.6	-25.0	-38.9	17.8	-12.6	-25.0	-38.9	17.8	-15.6	-30.6	-47.5	17.8
	3:12	-12.7	-25.0	-38.9	17.0	-12.7	-25.0	-38.9	17.0	-15.6	-30.6	-47.5	17.0
	4:12	-12.7	-25.0	-38.9	16.2	-12.7	-25.0	-38.9	16.2	-15.7	-30.7	-47.5	16.2
	5:12	-12.7	-25.1	-39.0	15.4	-12.7	-25.1	-39.0	15.4	-15.7	-30.7	-47.6	15.4
	6:12	-12.8	-25.1	-39.0	14.7	-12.8	-25.1	-39.0	14.7	-15.7	-30.7	-47.6	14.7
	7:12	-14.3	-17.4	-17.4	17.2	-14.3	-17.4	-17.4	17.2	-17.6	-21.4	-21.4	20.2
	8:12	-14.4	-17.5	-17.5	17.1	-14.4	-17.5	-17.5	17.1	-17.7	-21.4	-21.4	20.1
	9:12	-14.4	-17.5	-17.5	17.0	-14.4	-17.5	-17.5	17.0	-17.7	-21.5	-21.5	20.0
	10:12	-14.5	-17.5	-17.5	16.9	-14.5	-17.5	-17.5	16.9	-17.8	-21.5	-21.5	19.8
	11:12	-14.5	-17.6	-17.6	16.7	-14.5	-17.6	-17.6	16.7	-17.8	-21.6	-21.6	19.7
	12:12	-14.5	-17.6	-17.6	16.6	-14.5	-17.6	-17.6	16.6	-17.8	-21.6	-21.6	19.6
Exposure Category C	1:12	-17.5	-32.5	-51.2	18.5	-20.3	-37.6	-59.3	18.5	-23.7	-43.6	-68.5	18.5
	2:12	-15.6	-30.6	-47.5	17.8	-18.2	-35.5	-55.0	18.7	-21.2	-41.1	-63.6	19.9
	3:12	-15.6	-30.6	-47.5	17.0	-18.2	-35.5	-55.0	17.9	-21.2	-41.1	-63.6	19.2
	4:12	-15.7	-30.7	-47.5	16.2	-18.2	-35.5	-55.0	17.1	-21.2	-41.2	-63.6	18.4
	5:12	-15.7	-30.7	-47.6	15.4	-18.3	-35.6	-55.0	16.3	-21.3	-41.2	-63.6	17.6
	6:12	-15.7	-30.7	-47.6	14.7	-18.3	-35.6	-55.1	15.6	-21.3	-41.2	-63.7	16.8
	7:12	-17.6	-21.4	-21.4	20.2	-20.5	-24.8	-24.8	22.8	-23.8	-28.8	-28.8	25.8
	8:12	-17.7	-21.4	-21.4	20.1	-20.6	-24.9	-24.9	22.7	-23.9	-28.9	-28.9	25.6
	9:12	-17.7	-21.5	-21.5	20.0	-20.6	-24.9	-24.9	22.5	-23.9	-28.9	-28.9	25.5
	10:12	-17.8	-21.5	-21.5	19.8	-20.6	-25.0	-25.0	22.4	-23.9	-28.9	-28.9	25.4
	11:12	-17.8	-21.6	-21.6	19.7	-20.7	-25.0	-25.0	22.3	-24.0	-29.0	-29.0	25.3
	12:12	-17.8	-21.6	-21.6	19.6	-20.7	-25.0	-25.0	22.2	-24.0	-29.0	-29.0	25.2
Exposure Category D	1:12	-21.4	-39.6	-62.4	18.5	-24.3	-44.8	-70.4	18.5	-27.6	-50.7	-79.7	18.5
	2:12	-19.2	-37.4	-57.8	19.1	-21.8	-42.2	-65.3	20.2	-24.7	-47.9	-73.9	21.4
	3:12	-19.2	-37.4	-57.8	18.3	-21.8	-42.3	-65.3	19.4	-24.8	-47.9	-73.9	20.6
	4:12	-19.2	-37.4	-57.9	17.5	-21.8	-42.3	-65.3	18.6	-24.8	-47.9	-73.9	19.8
	5:12	-19.3	-37.4	-57.9	16.7	-21.9	-42.3	-65.4	17.8	-24.8	-48.0	-74.0	19.0
	6:12	-19.3	-37.5	-57.9	16.0	-21.9	-42.4	-65.4	17.0	-24.9	-48.0	-74.0	18.3
	7:12	-21.6	-26.2	-26.2	23.8	-24.5	-29.6	-29.6	26.4	-27.8	-33.6	-33.6	29.3
	8:12	-21.7	-26.2	-26.2	23.7	-24.5	-29.6	-29.6	26.2	-27.8	-33.6	-33.6	29.2
	9:12	-21.7	-26.2	-26.2	23.5	-24.6	-29.7	-29.7	26.1	-27.9	-33.7	-33.7	29.1
	10:12	-21.7	-26.3	-26.3	23.4	-24.6	-29.7	-29.7	26.0	-27.9	-33.7	-33.7	29.0
	11:12	-21.8	-26.3	-26.3	23.3	-24.6	-29.8	-29.8	25.9	-28.0	-33.7	-33.7	28.9
	12:12	-21.8	-26.4	-26.4	23.2	-24.7	-29.8	-29.8	25.8	-28.0	-33.8	-33.8	28.7

Side Load (psf)

	Roof Pitch	Ss = 0.0	Ss = 0.1	Ss = 0.2	Ss = 0.3	Ss = 0.4	Ss = 0.5	Ss = 1.0	Ss = 1.25	Ss = 1.5	Ss = 2.0	Ss = 2.5	Ss = 3.1
Down Slope	1:12	1.1	1.1	1.3	1.5	1.6	1.7	2.1	2.3	2.6	3.2	4.0	4.8
	2:12	2.1	2.1	2.1	2.3	2.4	2.5	3.0	3.1	3.4	4.0	4.5	5.2
	3:12	3.0	3.0	3.0	3.0	3.1	3.2	3.7	3.8	4.1	4.7	5.2	5.9
	4:12	3.6	3.6	3.6	3.6	3.7	3.8	4.2	4.4	4.7	5.2	5.8	6.4
	5:12	4.1	4.1	4.1	4.1	4.1	4.2	4.6	4.8	5.1	5.6	6.2	6.8
	6:12	4.4	4.4	4.4	4.4	4.4	4.5	4.9	5.1	5.4	5.9	6.4	7.1
	7:12	4.6	4.6	4.6	4.6	4.6	4.7	5.1	5.3	5.5	6.1	6.6	7.2
	8:12	4.7	4.7	4.7	4.7	4.7	4.8	5.2	5.4	5.6	6.2	6.7	7.3
	9:12	4.8	4.8	4.8	4.8	4.8	4.9	5.3	5.4	5.7	6.2	6.7	7.3
	10:12	4.7	4.7	4.7	4.7	4.8	4.9	5.3	5.4	5.7	6.2	6.7	7.3
	11:12	4.7	4.7	4.7	4.7	4.8	4.9	5.3	5.4	5.6	6.1	6.6	7.2
	12:12	4.6	4.6	4.6	4.6	4.7	4.8	5.2	5.4	5.6	6.1	6.5	7.1

Lateral

Ss = 0.0	Ss = 0.1	Ss = 0.2	Ss = 0.3	Ss = 0.4	Ss = 0.5	Ss = 1.0	Ss = 1.25	Ss = 1.5	Ss = 2.0	Ss = 2.5	Ss = 3.1
0.0	0.2	0.5	0.7	0.9	1.0	1.6	1.8	2.2	2.9	3.6	4.5

* These tables are meant as representative of the areas listed in the title. The local wind speeds and snow loads should be independantly verifed for the specific install location.

New Jersey (Typical)*

APPENDIX - Pressure Tables for Flush Mounted Roof Systems

7-10
ASCE

130 mph Basic Wind Speed

25 psf Ground Snow Load

Up and Down (psf)

		Bldg. Height = 15 ft.				Bldg. Height = 30 ft.				Bldg. Height = 60 ft.			
		Up Pressures (psf)			Down	Up Pressures (psf)			Down	Up Pressures (psf)			Down
	Roof Pitch	Zone 1	Zone 2	Zone 3	(psf)	Zone 1	Zone 2	Zone 3	(psf)	Zone 1	Zone 2	Zone 3	(psf)
Exposure Category B	1:12	-14.2	-26.5	-42.0	25.9	-14.2	-26.5	-42.0	25.9	-17.5	-32.5	-51.2	25.9
	2:12	-12.6	-25.0	-38.9	24.6	-12.6	-25.0	-38.9	24.6	-15.6	-30.6	-47.5	24.6
	3:12	-12.7	-25.0	-38.9	23.1	-12.7	-25.0	-38.9	23.1	-15.6	-30.6	-47.5	23.1
	4:12	-12.7	-25.0	-38.9	21.6	-12.7	-25.0	-38.9	21.6	-15.7	-30.7	-47.5	21.6
	5:12	-12.7	-25.1	-39.0	20.1	-12.7	-25.1	-39.0	20.1	-15.7	-30.7	-47.6	20.1
	6:12	-12.8	-25.1	-39.0	18.7	-12.8	-25.1	-39.0	18.7	-15.7	-30.7	-47.6	18.7
	7:12	-14.3	-17.4	-17.4	20.6	-14.3	-17.4	-17.4	20.6	-17.6	-21.4	-21.4	22.8
	8:12	-14.4	-17.5	-17.5	19.4	-14.4	-17.5	-17.5	19.4	-17.7	-21.4	-21.4	21.7
	9:12	-14.4	-17.5	-17.5	18.4	-14.4	-17.5	-17.5	18.4	-17.7	-21.5	-21.5	20.6
	10:12	-14.5	-17.5	-17.5	17.5	-14.5	-17.5	-17.5	17.5	-17.8	-21.5	-21.5	19.8
	11:12	-14.5	-17.6	-17.6	16.7	-14.5	-17.6	-17.6	16.7	-17.8	-21.6	-21.6	19.7
	12:12	-14.5	-17.6	-17.6	16.6	-14.5	-17.6	-17.6	16.6	-17.8	-21.6	-21.6	19.6
Exposure Category C	1:12	-17.5	-32.5	-51.2	25.9	-20.3	-37.6	-59.3	25.9	-23.7	-43.6	-68.5	25.9
	2:12	-15.6	-30.6	-47.5	24.6	-18.2	-35.5	-55.0	25.5	-21.2	-41.1	-63.6	26.7
	3:12	-15.6	-30.6	-47.5	23.1	-18.2	-35.5	-55.0	24.0	-21.2	-41.1	-63.6	25.2
	4:12	-15.7	-30.7	-47.5	21.6	-18.2	-35.5	-55.0	22.5	-21.2	-41.2	-63.6	23.7
	5:12	-15.7	-30.7	-47.6	20.1	-18.3	-35.6	-55.0	21.0	-21.3	-41.2	-63.6	22.2
	6:12	-15.7	-30.7	-47.6	18.7	-18.3	-35.6	-55.1	19.6	-21.3	-41.2	-63.7	20.8
	7:12	-17.6	-21.4	-21.4	22.8	-20.5	-24.8	-24.8	24.8	-23.8	-28.8	-28.8	27.0
	8:12	-17.7	-21.4	-21.4	21.7	-20.6	-24.9	-24.9	23.6	-23.9	-28.9	-28.9	25.8
	9:12	-17.7	-21.5	-21.5	20.6	-20.6	-24.9	-24.9	22.6	-23.9	-28.9	-28.9	25.5
	10:12	-17.8	-21.5	-21.5	19.8	-20.6	-25.0	-25.0	22.4	-23.9	-28.9	-28.9	25.4
	11:12	-17.8	-21.6	-21.6	19.7	-20.7	-25.0	-25.0	22.3	-24.0	-29.0	-29.0	25.3
	12:12	-17.8	-21.6	-21.6	19.6	-20.7	-25.0	-25.0	22.2	-24.0	-29.0	-29.0	25.2
Exposure Category D	1:12	-21.4	-39.6	-62.4	25.9	-24.3	-44.8	-70.4	25.9	-27.6	-50.7	-79.7	25.9
	2:12	-19.2	-37.4	-57.8	25.9	-21.8	-42.2	-65.3	27.0	-24.7	-47.9	-73.9	28.2
	3:12	-19.2	-37.4	-57.8	24.4	-21.8	-42.3	-65.3	25.5	-24.8	-47.9	-73.9	26.7
	4:12	-19.2	-37.4	-57.9	22.9	-21.8	-42.3	-65.3	24.0	-24.8	-47.9	-73.9	25.2
	5:12	-19.3	-37.4	-57.9	21.4	-21.9	-42.3	-65.4	22.5	-24.8	-48.0	-74.0	23.7
	6:12	-19.3	-37.5	-57.9	20.0	-21.9	-42.4	-65.4	21.1	-24.9	-48.0	-74.0	22.3
	7:12	-21.6	-26.2	-26.2	25.5	-24.5	-29.6	-29.6	27.4	-27.8	-33.6	-33.6	29.7
	8:12	-21.7	-26.2	-26.2	24.3	-24.5	-29.6	-29.6	26.3	-27.8	-33.6	-33.6	29.2
	9:12	-21.7	-26.2	-26.2	23.5	-24.6	-29.7	-29.7	26.1	-27.9	-33.7	-33.7	29.1
	10:12	-21.7	-26.3	-26.3	23.4	-24.6	-29.7	-29.7	26.0	-27.9	-33.7	-33.7	29.0
	11:12	-21.8	-26.3	-26.3	23.3	-24.6	-29.8	-29.8	25.9	-28.0	-33.7	-33.7	28.9
	12:12	-21.8	-26.4	-26.4	23.2	-24.7	-29.8	-29.8	25.8	-28.0	-33.8	-33.8	28.7

Side Load (psf)

	Roof Pitch	Ss = 0.0	Ss = 0.1	Ss = 0.2	Ss = 0.3	Ss = 0.4	Ss = 0.5	Ss = 1.0	Ss = 1.25	Ss = 1.5	Ss = 2.0	Ss = 2.5	Ss = 3.1
Down Slope	1:12	2.0	2.0	2.0	2.1	2.2	2.3	2.8	2.9	3.2	3.8	4.3	5.0
	2:12	3.7	3.7	3.7	3.7	3.7	3.7	4.1	4.3	4.6	5.1	5.7	6.3
	3:12	5.0	5.0	5.0	5.0	5.0	5.0	5.2	5.4	5.6	6.2	6.7	7.4
	4:12	6.0	6.0	6.0	6.0	6.0	6.0	6.0	6.2	6.4	7.0	7.6	8.2
	5:12	6.7	6.7	6.7	6.7	6.7	6.7	6.7	6.7	7.0	7.6	8.1	8.8
	6:12	7.1	7.1	7.1	7.1	7.1	7.1	7.1	7.1	7.4	7.9	8.4	9.1
	7:12	7.3	7.3	7.3	7.3	7.3	7.3	7.3	7.3	7.5	8.1	8.6	9.2
	8:12	7.3	7.3	7.3	7.3	7.3	7.3	7.3	7.3	7.6	8.1	8.6	9.2
	9:12	7.2	7.2	7.2	7.2	7.2	7.2	7.2	7.3	7.5	8.0	8.5	9.2
	10:12	7.0	7.0	7.0	7.0	7.0	7.0	7.0	7.1	7.4	7.9	8.4	9.0
	11:12	6.8	6.8	6.8	6.8	6.8	6.8	6.8	7.0	7.2	7.7	8.2	8.8
	12:12	6.6	6.6	6.6	6.6	6.6	6.6	6.7	6.8	7.0	7.5	8.0	8.6

Lateral

Ss = 0.0	Ss = 0.1	Ss = 0.2	Ss = 0.3	Ss = 0.4	Ss = 0.5	Ss = 1.0	Ss = 1.25	Ss = 1.5	Ss = 2.0	Ss = 2.5	Ss = 3.1
0.0	0.2	0.5	0.7	0.9	1.0	1.6	1.8	2.2	2.9	3.6	4.5

* These tables are meant as representative of the areas listed in the title. The local wind speeds and snow loads should be independantly verifed for the specific install location.

Florida (Typical)*

APPENDIX - Pressure Tables for Flush Mounted Roof Systems

7-10
ASCE

160 mph
Basic Wind Speed

0 psf
Ground Snow Load

Up and Down (psf)

	Roof Pitch	Bldg. Height = 15 ft. Up Pressures (psf) Zone 1	Zone 2	Zone 3	Down (psf)	Bldg. Height = 30 ft. Up Pressures (psf) Zone 1	Zone 2	Zone 3	Down (psf)	Bldg. Height = 60 ft. Up Pressures (psf) Zone 1	Zone 2	Zone 3	Down (psf)
Exposure Category B	1:12	-22.1	-40.8	-64.2	13.4	-22.1	-40.8	-64.2	13.4	-27.1	-49.9	-78.3	13.4
	2:12	-19.8	-38.5	-59.6	15.5	-19.8	-38.5	-59.6	15.5	-24.3	-47.0	-72.6	18.0
	3:12	-19.8	-38.5	-59.6	15.4	-19.8	-38.5	-59.6	15.4	-24.3	-47.1	-72.6	17.9
	4:12	-19.8	-38.6	-59.6	15.3	-19.8	-38.6	-59.6	15.3	-24.4	-47.1	-72.6	17.9
	5:12	-19.9	-38.6	-59.6	15.2	-19.9	-38.6	-59.6	15.2	-24.4	-47.1	-72.7	17.8
	6:12	-19.9	-38.6	-59.7	15.1	-19.9	-38.6	-59.7	15.1	-24.4	-47.1	-72.7	17.6
	7:12	-22.3	-27.0	-27.0	24.4	-22.3	-27.0	-27.0	24.4	-27.3	-33.0	-33.0	28.9
	8:12	-22.3	-27.0	-27.0	24.3	-22.3	-27.0	-27.0	24.3	-27.3	-33.0	-33.0	28.8
	9:12	-22.4	-27.0	-27.0	24.1	-22.4	-27.0	-27.0	24.1	-27.4	-33.1	-33.1	28.6
	10:12	-22.4	-27.1	-27.1	24.0	-22.4	-27.1	-27.1	24.0	-27.4	-33.1	-33.1	28.5
	11:12	-22.4	-27.1	-27.1	23.9	-22.4	-27.1	-27.1	23.9	-27.5	-33.1	-33.1	28.4
	12:12	-22.5	-27.2	-27.2	23.8	-22.5	-27.2	-27.2	23.8	-27.5	-33.2	-33.2	28.3
Exposure Category C	1:12	-27.1	-49.9	-78.3	13.4	-31.5	-57.7	-90.4	13.7	-36.5	-66.7	-104.5	15.2
	2:12	-24.3	-47.0	-72.6	18.0	-28.2	-54.4	-83.9	20.2	-32.7	-62.9	-96.9	22.7
	3:12	-24.3	-47.1	-72.6	17.9	-28.2	-54.4	-83.9	20.1	-32.7	-63.0	-97.0	22.6
	4:12	-24.4	-47.1	-72.6	17.9	-28.3	-54.5	-83.9	20.0	-32.8	-63.0	-97.0	22.5
	5:12	-24.4	-47.1	-72.7	17.8	-28.3	-54.5	-84.0	19.9	-32.8	-63.0	-97.0	22.4
	6:12	-24.4	-47.1	-72.7	17.6	-28.3	-54.5	-84.0	19.8	-32.8	-63.1	-97.0	22.3
	7:12	-27.3	-33.0	-33.0	28.9	-31.6	-38.2	-38.2	32.8	-36.7	-44.2	-44.2	37.3
	8:12	-27.3	-33.0	-33.0	28.8	-31.7	-38.2	-38.2	32.7	-36.7	-44.3	-44.3	37.2
	9:12	-27.4	-33.1	-33.1	28.6	-31.7	-38.3	-38.3	32.6	-36.7	-44.3	-44.3	37.1
	10:12	-27.4	-33.1	-33.1	28.5	-31.8	-38.3	-38.3	32.4	-36.8	-44.3	-44.3	36.9
	11:12	-27.5	-33.1	-33.1	28.4	-31.8	-38.4	-38.4	32.3	-36.8	-44.4	-44.4	36.8
	12:12	-27.5	-33.2	-33.2	28.3	-31.8	-38.4	-38.4	32.2	-36.9	-44.4	-44.4	36.7
Exposure Category D	1:12	-33.1	-60.7	-95.1	14.2	-37.5	-68.5	-107.3	15.5	-42.5	-77.5	-121.3	17.0
	2:12	-29.7	-57.3	-88.2	21.0	-33.6	-64.6	-99.5	23.2	-38.1	-73.2	-112.6	25.7
	3:12	-29.7	-57.3	-88.3	20.9	-33.6	-64.7	-99.6	23.1	-38.2	-73.2	-112.6	25.6
	4:12	-29.8	-57.3	-88.3	20.9	-33.7	-64.7	-99.6	23.0	-38.2	-73.2	-112.6	25.5
	5:12	-29.8	-57.3	-88.3	20.8	-33.7	-64.7	-99.6	22.9	-38.2	-73.2	-112.7	25.4
	6:12	-29.8	-57.4	-88.4	20.7	-33.7	-64.8	-99.7	22.8	-38.3	-73.3	-112.7	25.3
	7:12	-33.3	-40.2	-40.2	34.3	-37.7	-45.4	-45.4	38.2	-42.7	-51.4	-51.4	42.7
	8:12	-33.4	-40.2	-40.2	34.2	-37.7	-45.5	-45.5	38.1	-42.7	-51.5	-51.5	42.6
	9:12	-33.4	-40.3	-40.3	34.1	-37.7	-45.5	-45.5	38.0	-42.8	-51.5	-51.5	42.5
	10:12	-33.4	-40.3	-40.3	33.9	-37.8	-45.5	-45.5	37.8	-42.8	-51.6	-51.6	42.4
	11:12	-33.5	-40.4	-40.4	33.8	-37.8	-45.6	-45.6	37.7	-42.8	-51.6	-51.6	42.2
	12:12	-33.5	-40.4	-40.4	33.7	-37.9	-45.6	-45.6	37.6	-42.9	-51.6	-51.6	42.1

Side Load (psf)

	Roof Pitch	Ss = 0.0	Ss = 0.1	Ss = 0.2	Ss = 0.3	Ss = 0.4	Ss = 0.5	Ss = 1.0	Ss = 1.25	Ss = 1.5	Ss = 2.0	Ss = 2.5	Ss = 3.1
Down Slope	1:12	0.3	0.6	0.8	1.0	1.2	1.3	1.9	2.1	2.5	3.2	4.0	4.8
	2:12	0.6	0.9	1.1	1.3	1.5	1.7	2.3	2.5	2.8	3.6	4.3	5.2
	3:12	0.9	1.2	1.4	1.6	1.8	2.0	2.6	2.8	3.2	3.9	4.6	5.5
	4:12	1.2	1.5	1.7	1.9	2.1	2.3	2.8	3.1	3.4	4.2	4.9	5.8
	5:12	1.5	1.7	1.9	2.2	2.3	2.5	3.1	3.3	3.7	4.4	5.1	6.0
	6:12	1.7	2.0	2.2	2.4	2.6	2.7	3.3	3.5	3.9	4.6	5.3	6.2
	7:12	1.9	2.2	2.4	2.6	2.8	2.9	3.5	3.7	4.1	4.8	5.5	6.3
	8:12	2.1	2.4	2.6	2.8	3.0	3.1	3.7	3.9	4.2	4.9	5.6	6.5
	9:12	2.3	2.5	2.7	2.9	3.1	3.3	3.8	4.0	4.4	5.0	5.7	6.5
	10:12	2.5	2.7	2.9	3.1	3.3	3.4	3.9	4.1	4.5	5.1	5.8	6.6
	11:12	2.6	2.8	3.0	3.2	3.4	3.5	4.0	4.2	4.6	5.2	5.9	6.6
	12:12	2.7	2.9	3.1	3.3	3.5	3.6	4.1	4.3	4.6	5.3	5.9	6.7

Lateral

Ss = 0.0	Ss = 0.1	Ss = 0.2	Ss = 0.3	Ss = 0.4	Ss = 0.5	Ss = 1.0	Ss = 1.25	Ss = 1.5	Ss = 2.0	Ss = 2.5	Ss = 3.1
0.0	0.2	0.5	0.7	0.9	1.0	1.6	1.8	2.2	2.9	3.6	4.5

* These tables are meant as representative of the areas listed in the title. The local wind speeds and snow loads should be independantly verifed for the specific install location.

Louisiana (Typical)*

APPENDIX - Pressure Tables for Flush Mounted Roof Systems

7-10 ASCE

170 mph Basic Wind Speed

0 psf Ground Snow Load

Up and Down (psf)

	Roof Pitch	Bldg. Height = 15 ft. Up Pressures (psf) Zone 1	Zone 2	Zone 3	Down (psf)	Bldg. Height = 30 ft. Up Pressures (psf) Zone 1	Zone 2	Zone 3	Down (psf)	Bldg. Height = 60 ft. Up Pressures (psf) Zone 1	Zone 2	Zone 3	Down (psf)
Exposure Category B	1:12	-25.1	-46.3	-72.7	13.4	-25.1	-46.3	-72.7	13.4	-30.8	-56.4	-88.5	13.5
	2:12	-22.5	-43.6	-67.4	17.0	-22.5	-43.6	-67.4	17.0	-27.6	-53.3	-82.1	19.8
	3:12	-22.5	-43.7	-67.4	16.9	-22.5	-43.7	-67.4	16.9	-27.6	-53.3	-82.1	19.8
	4:12	-22.6	-43.7	-67.5	16.9	-22.6	-43.7	-67.5	16.9	-27.6	-53.3	-82.2	19.7
	5:12	-22.6	-43.7	-67.5	16.8	-22.6	-43.7	-67.5	16.8	-27.7	-53.3	-82.2	19.6
	6:12	-22.6	-43.8	-67.5	16.6	-22.6	-43.8	-67.5	16.6	-27.7	-53.4	-82.2	19.5
	7:12	-25.3	-30.6	-30.6	27.1	-25.3	-30.6	-30.6	27.1	-31.0	-37.4	-37.4	32.2
	8:12	-25.3	-30.6	-30.6	27.0	-25.3	-30.6	-30.6	27.0	-31.0	-37.4	-37.4	32.1
	9:12	-25.4	-30.7	-30.7	26.8	-25.4	-30.7	-30.7	26.8	-31.0	-37.5	-37.5	31.9
	10:12	-25.4	-30.7	-30.7	26.7	-25.4	-30.7	-30.7	26.7	-31.1	-37.5	-37.5	31.8
	11:12	-25.5	-30.7	-30.7	26.6	-25.5	-30.7	-30.7	26.6	-31.1	-37.5	-37.5	31.7
	12:12	-25.5	-30.8	-30.8	26.5	-25.5	-30.8	-30.8	26.5	-31.2	-37.6	-37.6	31.6
Exposure Category C	1:12	-30.8	-56.4	-88.5	13.5	-35.7	-65.3	-102.3	14.9	-41.4	-75.5	-118.1	16.6
	2:12	-27.6	-53.3	-82.1	19.8	-32.0	-61.6	-94.9	22.3	-37.1	-71.2	-109.6	25.1
	3:12	-27.6	-53.3	-82.1	19.8	-32.0	-61.6	-94.9	22.2	-37.1	-71.2	-109.6	25.1
	4:12	-27.6	-53.3	-82.2	19.7	-32.1	-61.6	-94.9	22.1	-37.2	-71.3	-109.6	25.0
	5:12	-27.7	-53.3	-82.2	19.6	-32.1	-61.7	-95.0	22.0	-37.2	-71.3	-109.7	24.9
	6:12	-27.7	-53.4	-82.2	19.5	-32.1	-61.7	-95.0	21.9	-37.2	-71.3	-109.7	24.8
	7:12	-31.0	-37.4	-37.4	32.2	-35.9	-43.3	-43.3	36.6	-41.5	-50.1	-50.1	41.7
	8:12	-31.0	-37.4	-37.4	32.1	-35.9	-43.3	-43.3	36.5	-41.6	-50.1	-50.1	41.6
	9:12	-31.0	-37.5	-37.5	31.9	-35.9	-43.3	-43.3	36.4	-41.6	-50.1	-50.1	41.5
	10:12	-31.1	-37.5	-37.5	31.8	-36.0	-43.4	-43.4	36.2	-41.7	-50.2	-50.2	41.3
	11:12	-31.1	-37.5	-37.5	31.7	-36.0	-43.4	-43.4	36.1	-41.7	-50.2	-50.2	41.2
	12:12	-31.2	-37.6	-37.6	31.6	-36.1	-43.5	-43.5	36.0	-41.7	-50.3	-50.3	41.1
Exposure Category D	1:12	-37.6	-68.7	-107.5	15.5	-42.5	-77.5	-121.3	17.0	-48.1	-87.7	-137.1	18.7
	2:12	-33.7	-64.8	-99.8	23.2	-38.1	-73.1	-112.5	25.7	-43.2	-82.8	-127.2	28.5
	3:12	-33.7	-64.8	-99.8	23.2	-38.1	-73.2	-112.6	25.6	-43.2	-82.8	-127.3	28.4
	4:12	-33.8	-64.9	-99.8	23.1	-38.2	-73.2	-112.6	25.5	-43.3	-82.8	-127.3	28.4
	5:12	-33.8	-64.9	-99.9	23.0	-38.2	-73.2	-112.6	25.4	-43.3	-82.8	-127.3	28.3
	6:12	-33.8	-64.9	-99.9	22.9	-38.2	-73.3	-112.7	25.3	-43.3	-82.9	-127.4	28.2
	7:12	-37.8	-45.5	-45.5	38.3	-42.7	-51.4	-51.4	42.7	-48.3	-58.2	-58.2	47.8
	8:12	-37.8	-45.6	-45.6	38.2	-42.7	-51.5	-51.5	42.6	-48.4	-58.2	-58.2	47.7
	9:12	-37.8	-45.6	-45.6	38.1	-42.7	-51.5	-51.5	42.5	-48.4	-58.3	-58.3	47.6
	10:12	-37.9	-45.6	-45.6	37.9	-42.8	-51.5	-51.5	42.3	-48.4	-58.3	-58.3	47.4
	11:12	-37.9	-45.7	-45.7	37.8	-42.8	-51.6	-51.6	42.2	-48.5	-58.4	-58.4	47.3
	12:12	-38.0	-45.7	-45.7	37.7	-42.9	-51.6	-51.6	42.1	-48.5	-58.4	-58.4	47.2

Side Load (psf)

Down Slope	Roof Pitch	Ss = 0.0	Ss = 0.1	Ss = 0.2	Ss = 0.3	Ss = 0.4	Ss = 0.5	Ss = 1.0	Ss = 1.25	Ss = 1.5	Ss = 2.0	Ss = 2.5	Ss = 3.1
	1:12	0.3	0.6	0.8	1.0	1.2	1.3	1.9	2.1	2.5	3.2	4.0	4.8
	2:12	0.6	0.9	1.1	1.3	1.5	1.7	2.3	2.5	2.8	3.6	4.3	5.2
	3:12	0.9	1.2	1.4	1.6	1.8	2.0	2.6	2.8	3.2	3.9	4.6	5.5
	4:12	1.2	1.5	1.7	1.9	2.1	2.3	2.8	3.1	3.4	4.2	4.9	5.8
	5:12	1.5	1.7	1.9	2.2	2.3	2.5	3.1	3.3	3.7	4.4	5.1	6.0
	6:12	1.7	2.0	2.2	2.4	2.6	2.7	3.3	3.5	3.9	4.6	5.3	6.2
	7:12	1.9	2.2	2.4	2.6	2.8	2.9	3.5	3.7	4.1	4.8	5.5	6.3
	8:12	2.1	2.4	2.6	2.8	3.0	3.1	3.7	3.9	4.2	4.9	5.6	6.5
	9:12	2.3	2.5	2.7	2.9	3.1	3.3	3.8	4.0	4.4	5.0	5.7	6.5
	10:12	2.5	2.7	2.9	3.1	3.3	3.4	3.9	4.1	4.5	5.1	5.8	6.6
	11:12	2.6	2.8	3.0	3.2	3.4	3.5	4.0	4.2	4.6	5.2	5.9	6.6
	12:12	2.7	2.9	3.1	3.3	3.5	3.6	4.1	4.3	4.6	5.3	5.9	6.7

Lateral

Ss = 0.0	Ss = 0.1	Ss = 0.2	Ss = 0.3	Ss = 0.4	Ss = 0.5	Ss = 1.0	Ss = 1.25	Ss = 1.5	Ss = 2.0	Ss = 2.5	Ss = 3.1
0.0	0.2	0.5	0.7	0.9	1.0	1.6	1.8	2.2	2.9	3.6	4.5

* These tables are meant as representative of the areas listed in the title. The local wind speeds and snow loads should be independantly verifed for the specific install location.

APPENDIX C

Downward & Upward Span Length Tables

SOLARMOUNT Standard Rail		Downforce Span Length										
		20 plf	30 plf	40 plf	50 plf	60 plf	70 plf	80 plf	100 plf	120 plf	150 plf	180 plf
Horizontal Load	0 plf	12.5 ft	11.0 ft	10.0 ft	9.0 ft	8.5 ft	7.5 ft	7.0 ft	6.5 ft	6.0 ft	5.0 ft	4.5 ft
	5 plf	12.5 ft	11.0 ft	10.0 ft	9.0 ft	8.0 ft	7.5 ft	7.0 ft	6.5 ft	6.0 ft	5.0 ft	4.5 ft
	10 plf	11.0 ft	10.0 ft	9.0 ft	8.5 ft	8.0 ft	7.5 ft	7.0 ft	6.5 ft	5.5 ft	5.0 ft	4.5 ft
	15 plf	7.5 ft	7.5 ft	7.5 ft	7.5 ft	7.5 ft	7.0 ft	6.5 ft	6.0 ft	5.5 ft	5.0 ft	4.5 ft
	20 plf	5.5 ft	5.5 ft	5.5 ft	5.5 ft	5.5 ft	5.5 ft	5.5 ft	5.5 ft	5.5 ft	5.0 ft	4.5 ft
	25 plf	4.5 ft	4.5 ft	4.5 ft	4.5 ft	4.5 ft	4.5 ft	4.5 ft	4.5 ft	4.5 ft	4.5 ft	4.5 ft
	30 plf	3.5 ft	3.5 ft	3.5 ft	3.5 ft	3.5 ft	3.5 ft	3.5 ft	3.5 ft	3.5 ft	3.5 ft	3.5 ft
	35 plf	3.0 ft	3.0 ft	3.0 ft	3.0 ft	3.0 ft	3.0 ft	3.0 ft	3.0 ft	3.0 ft	3.0 ft	3.0 ft
	40 plf	2.5 ft	2.5 ft	2.5 ft	2.5 ft	2.5 ft	2.5 ft	2.5 ft	2.5 ft	2.5 ft	2.5 ft	2.5 ft
	50 plf	2.0 ft	2.0 ft	2.0 ft	2.0 ft	2.0 ft	2.0 ft	2.0 ft	2.0 ft	2.0 ft	2.0 ft	2.0 ft
	60 plf	1.5 ft	1.5 ft	1.5 ft	1.5 ft	1.5 ft	1.5 ft	1.5 ft	1.5 ft	1.5 ft	1.5 ft	1.5 ft
	70 plf	1.5 ft	1.5 ft	1.5 ft	1.5 ft	1.5 ft	1.5 ft	1.5 ft	1.5 ft	1.5 ft	1.5 ft	1.5 ft

SOLARMOUNT Standard Rail		Uplift Span Length										
		20 plf	30 plf	40 plf	50 plf	60 plf	70 plf	80 plf	100 plf	120 plf	150 plf	180 plf
Horizontal Load	0 plf	12.5 ft	11.0 ft	10.0 ft	9.0 ft	8.5 ft	7.5 ft	7.0 ft	6.5 ft	6.0 ft	5.0 ft	4.0 ft
	5 plf	12.5 ft	11.0 ft	10.0 ft	9.0 ft	8.0 ft	7.5 ft	7.0 ft	6.5 ft	6.0 ft	5.0 ft	4.0 ft
	10 plf	11.0 ft	10.0 ft	9.0 ft	8.5 ft	8.0 ft	7.5 ft	7.0 ft	6.5 ft	5.5 ft	5.0 ft	4.0 ft
	15 plf	7.5 ft	7.5 ft	7.5 ft	7.5 ft	7.5 ft	7.0 ft	6.5 ft	6.0 ft	5.5 ft	5.0 ft	4.0 ft
	20 plf	5.5 ft	5.5 ft	5.5 ft	5.5 ft	5.5 ft	5.5 ft	5.5 ft	5.5 ft	5.5 ft	5.0 ft	4.0 ft
	25 plf	4.5 ft	4.5 ft	4.5 ft	4.5 ft	4.5 ft	4.5 ft	4.5 ft	4.5 ft	4.5 ft	4.5 ft	4.0 ft
	30 plf	3.5 ft	3.5 ft	3.5 ft	3.5 ft	3.5 ft	3.5 ft	3.5 ft	3.5 ft	3.5 ft	3.5 ft	3.5 ft
	35 plf	3.0 ft	3.0 ft	3.0 ft	3.0 ft	3.0 ft	3.0 ft	3.0 ft	3.0 ft	3.0 ft	3.0 ft	3.0 ft
	40 plf	2.5 ft	2.5 ft	2.5 ft	2.5 ft	2.5 ft	2.5 ft	2.5 ft	2.5 ft	2.5 ft	2.5 ft	2.5 ft
	50 plf	2.0 ft	2.0 ft	2.0 ft	2.0 ft	2.0 ft	2.0 ft	2.0 ft	2.0 ft	2.0 ft	2.0 ft	2.0 ft
	60 plf	1.5 ft	1.5 ft	1.5 ft	1.5 ft	1.5 ft	1.5 ft	1.5 ft	1.5 ft	1.5 ft	1.5 ft	1.5 ft
	70 plf	1.5 ft	1.5 ft	1.5 ft	1.5 ft	1.5 ft	1.5 ft	1.5 ft	1.5 ft	1.5 ft	1.5 ft	1.5 ft

Note: No Interpolation Permitted.

Example:

60 plf	Downward Load (strong axis)	8.0 ft	Max Span for Downforce
50 plf	Upward Load (strong axis)	8.5 ft	Max Span for Uplift
10 plf	Horizontal Load (weak axis)	**8.0 ft**	**Max Span = min (downforce, uplift) with SOLARMOUNT Standard Rail**

APPENDIX C

Downward & Upward Span Length Tables

SOLARMOUNT Light (LT) Rail		Downforce Span Length										
		20 plf	30 plf	40 plf	50 plf	60 plf	70 plf	80 plf	100 plf	120 plf	150 plf	180 plf
Horizontal Load	0 plf	8.0 ft	7.0 ft	6.5 ft	6.0 ft	5.5 ft	5.0 ft	4.5 ft	4.0 ft	3.5 ft	3.5 ft	3.0 ft
	5 plf	8.0 ft	7.0 ft	6.5 ft	6.0 ft	5.5 ft	5.0 ft	4.5 ft	4.0 ft	3.5 ft	3.5 ft	3.0 ft
	10 plf	7.5 ft	7.0 ft	6.0 ft	5.5 ft	5.0 ft	5.0 ft	4.5 ft	4.0 ft	3.5 ft	3.5 ft	3.0 ft
	15 plf	7.0 ft	6.5 ft	6.0 ft	5.5 ft	5.0 ft	4.5 ft	4.5 ft	4.0 ft	3.5 ft	3.0 ft	3.0 ft
	20 plf	6.0 ft	5.5 ft	5.5 ft	5.0 ft	5.0 ft	4.5 ft	4.5 ft	4.0 ft	3.5 ft	3.0 ft	3.0 ft
	25 plf	5.5 ft	5.5 ft	5.0 ft	5.0 ft	4.5 ft	4.5 ft	4.0 ft	4.0 ft	3.5 ft	3.0 ft	3.0 ft
	30 plf	4.5 ft	4.5 ft	4.5 ft	4.5 ft	4.5 ft	4.0 ft	4.0 ft	3.5 ft	3.5 ft	3.0 ft	3.0 ft
	35 plf	3.5 ft	3.5 ft	3.5 ft	3.5 ft	3.5 ft	3.5 ft	3.5 ft	3.5 ft	3.5 ft	3.0 ft	3.0 ft
	40 plf	3.0 ft	3.0 ft	3.0 ft	3.0 ft	3.0 ft	3.0 ft	3.0 ft	3.0 ft	3.0 ft	3.0 ft	3.0 ft
	50 plf	2.5 ft	2.5 ft	2.5 ft	2.5 ft	2.5 ft	2.5 ft	2.5 ft	2.5 ft	2.5 ft	2.5 ft	2.5 ft
	60 plf	2.0 ft	2.0 ft	2.0 ft	2.0 ft	2.0 ft	2.0 ft	2.0 ft	2.0 ft	2.0 ft	2.0 ft	2.0 ft
	70 plf	1.5 ft	1.5 ft	1.5 ft	1.5 ft	1.5 ft	1.5 ft	1.5 ft	1.5 ft	1.5 ft	1.5 ft	1.5 ft

SOLARMOUNT Light (LT) Rail		Uplift Span Length										
		20 plf	30 plf	40 plf	50 plf	60 plf	70 plf	80 plf	100 plf	120 plf	150 plf	180 plf
Horizontal Load	0 plf	8.0 ft	7.0 ft	6.5 ft	6.0 ft	5.5 ft	5.0 ft	4.5 ft	4.0 ft	3.5 ft	3.0 ft	2.5 ft
	5 plf	8.0 ft	7.0 ft	6.5 ft	6.0 ft	5.5 ft	5.0 ft	4.5 ft	4.0 ft	3.5 ft	3.0 ft	2.5 ft
	10 plf	7.5 ft	7.0 ft	6.0 ft	5.5 ft	5.0 ft	5.0 ft	4.5 ft	4.0 ft	3.5 ft	3.0 ft	2.5 ft
	15 plf	7.0 ft	6.5 ft	6.0 ft	5.5 ft	5.0 ft	4.5 ft	4.5 ft	4.0 ft	3.5 ft	3.0 ft	2.5 ft
	20 plf	6.0 ft	5.5 ft	5.5 ft	5.0 ft	5.0 ft	4.5 ft	4.5 ft	4.0 ft	3.5 ft	3.0 ft	2.5 ft
	25 plf	5.5 ft	5.5 ft	5.0 ft	5.0 ft	4.5 ft	4.5 ft	4.0 ft	4.0 ft	3.5 ft	3.0 ft	2.5 ft
	30 plf	4.5 ft	4.5 ft	4.5 ft	4.5 ft	4.5 ft	4.0 ft	4.0 ft	3.5 ft	3.5 ft	3.0 ft	2.5 ft
	35 plf	3.5 ft	3.5 ft	3.5 ft	3.5 ft	3.5 ft	3.5 ft	3.5 ft	3.5 ft	3.5 ft	3.0 ft	2.5 ft
	40 plf	3.0 ft	3.0 ft	3.0 ft	3.0 ft	3.0 ft	3.0 ft	3.0 ft	3.0 ft	3.0 ft	3.0 ft	2.5 ft
	50 plf	2.5 ft	2.5 ft	2.5 ft	2.5 ft	2.5 ft	2.5 ft	2.5 ft	2.5 ft	2.5 ft	2.5 ft	2.5 ft
	60 plf	2.0 ft	2.0 ft	2.0 ft	2.0 ft	2.0 ft	2.0 ft	2.0 ft	2.0 ft	2.0 ft	2.0 ft	2.0 ft
	70 plf	1.5 ft	1.5 ft	1.5 ft	1.5 ft	1.5 ft	1.5 ft	1.5 ft	1.5 ft	1.5 ft	1.5 ft	1.5 ft

Note: No Interpolation Permitted.

Example:

60 plf	Downward Load (strong axis)
50 plf	Upward Load (strong axis)
10 plf	Horizontal Load (weak axis)

5.0 ft	Max Span for Downforce
5.5 ft	Max Span for Uplift
5.0 ft	**Max Span = min (downforce, uplift) with SOLARMOUNT Light (LT) Rail**

APPENDIX C

Downward & Upward Span Length Tables

SOLARMOUNT Heavy Duty (HD) Rail		Downforce Span Length										
		20 plf	30 plf	40 plf	50 plf	60 plf	70 plf	80 plf	100 plf	120 plf	150 plf	180 plf
Horizontal Load	0 plf	18.5 ft	16.0 ft	14.5 ft	13.5 ft	12.5 ft	12.0 ft	11.5 ft	10.5 ft	9.0 ft	7.0 ft	6.0 ft
	5 plf	18.5 ft	16.0 ft	14.5 ft	13.5 ft	12.5 ft	12.0 ft	11.5 ft	10.0 ft	9.0 ft	7.0 ft	6.0 ft
	10 plf	11.5 ft	11.5 ft	11.5 ft	11.5 ft	11.5 ft	11.5 ft	11.0 ft	10.0 ft	9.0 ft	7.0 ft	6.0 ft
	15 plf	7.5 ft	7.5 ft	7.5 ft	7.5 ft	7.5 ft	7.5 ft	7.5 ft	7.5 ft	7.5 ft	7.0 ft	6.0 ft
	20 plf	5.5 ft	5.5 ft	5.5 ft	5.5 ft	5.5 ft	5.5 ft	5.5 ft	5.5 ft	5.5 ft	5.5 ft	5.5 ft
	25 plf	4.5 ft	4.5 ft	4.5 ft	4.5 ft	4.5 ft	4.5 ft	4.5 ft	4.5 ft	4.5 ft	4.5 ft	4.5 ft
	30 plf	3.5 ft	3.5 ft	3.5 ft	3.5 ft	3.5 ft	3.5 ft	3.5 ft	3.5 ft	3.5 ft	3.5 ft	3.5 ft
	35 plf	3.0 ft	3.0 ft	3.0 ft	3.0 ft	3.0 ft	3.0 ft	3.0 ft	3.0 ft	3.0 ft	3.0 ft	3.0 ft
	40 plf	2.5 ft	2.5 ft	2.5 ft	2.5 ft	2.5 ft	2.5 ft	2.5 ft	2.5 ft	2.5 ft	2.5 ft	2.5 ft
	50 plf	2.0 ft	2.0 ft	2.0 ft	2.0 ft	2.0 ft	2.0 ft	2.0 ft	2.0 ft	2.0 ft	2.0 ft	2.0 ft
	60 plf	1.5 ft	1.5 ft	1.5 ft	1.5 ft	1.5 ft	1.5 ft	1.5 ft	1.5 ft	1.5 ft	1.5 ft	1.5 ft
	70 plf	1.5 ft	1.5 ft	1.5 ft	1.5 ft	1.5 ft	1.5 ft	1.5 ft	1.5 ft	1.5 ft	1.5 ft	1.5 ft

SOLARMOUNT Heavy Duty (HD) Rail		Uplift Span Length										
		20 plf	30 plf	40 plf	50 plf	60 plf	70 plf	80 plf	100 plf	120 plf	150 plf	180 plf
Horizontal Load	0 plf	18.5 ft	16.0 ft	14.5 ft	13.5 ft	12.5 ft	10.5 ft	9.0 ft	7.5 ft	6.0 ft	5.0 ft	4.0 ft
	5 plf	18.5 ft	16.0 ft	14.5 ft	13.5 ft	12.5 ft	10.5 ft	9.0 ft	7.5 ft	6.0 ft	5.0 ft	4.0 ft
	10 plf	11.5 ft	11.5 ft	14.0 ft	13.0 ft	12.0 ft	10.5 ft	9.0 ft	7.5 ft	6.0 ft	5.0 ft	4.0 ft
	15 plf	7.5 ft	7.5 ft	7.5 ft	7.5 ft	7.5 ft	7.5 ft	9.0 ft	7.5 ft	6.0 ft	5.0 ft	4.0 ft
	20 plf	5.5 ft	5.5 ft	5.5 ft	5.5 ft	5.5 ft	5.5 ft	5.5 ft	5.5 ft	6.0 ft	5.0 ft	4.0 ft
	25 plf	4.5 ft	4.5 ft	4.5 ft	4.5 ft	4.5 ft	4.5 ft	4.5 ft	4.5 ft	4.5 ft	4.5 ft	4.0 ft
	30 plf	3.5 ft	3.5 ft	3.5 ft	3.5 ft	3.5 ft	3.5 ft	3.5 ft	3.5 ft	3.5 ft	3.5 ft	3.5 ft
	35 plf	3.0 ft	3.0 ft	3.0 ft	3.0 ft	3.0 ft	3.0 ft	3.0 ft	3.0 ft	3.0 ft	3.0 ft	3.0 ft
	40 plf	2.5 ft	2.5 ft	2.5 ft	2.5 ft	2.5 ft	2.5 ft	2.5 ft	2.5 ft	2.5 ft	2.5 ft	2.5 ft
	50 plf	2.0 ft	2.0 ft	2.0 ft	2.0 ft	2.0 ft	2.0 ft	2.0 ft	2.0 ft	2.0 ft	2.0 ft	2.0 ft
	60 plf	1.5 ft	1.5 ft	1.5 ft	1.5 ft	1.5 ft	1.5 ft	1.5 ft	1.5 ft	1.5 ft	1.5 ft	1.5 ft
	70 plf	1.5 ft	1.5 ft	1.5 ft	1.5 ft	1.5 ft	1.5 ft	1.5 ft	1.5 ft	1.5 ft	1.5 ft	1.5 ft

Note: No Interpolation Permitted.

Example:

60 plf	Downward Load (strong axis)
50 plf	Upward Load (strong axis)
10 plf	Horizontal Load (weak axis)

11.5 ft	Max Span for Downforce
13.0 ft	Max Span for Uplift
11.5 ft	**Max Span = min (downforce, uplift) with SOLARMOUNT Heavy Duty (HD) Rail**

SOLARMOUNT FRONT TRIM

SOLARMOUNT Front Trim should not be installed in areas where the wind load exceeds 100 psf, where the distance from clamp to clamp (span) exceeds 52 inches, or where the cantilever (overhang) is greater than 66% of the span length.

Roof Pitch to Angle Conversion:

12:12 = 45°

11:12 = 42.50°

10:12 = 39.81°

9:12 = 36.87°

8:12 = 33.69°

7:12 = 30.26°

6:12 = 26.57°

5:12 = 22.62°
Still Walkable

4:12 = 18.43°
Standard Roof Pitch

3:12 = 14.04°
Typical in Southern Climates

2:12 = 9.46°
Low Roof Pitch

APPENDIX E
Dead Load Analysis

The Pressure Lookup Tables and U-Builder include service dead loads ranging from 2.1 to 3.8 psf and include the weight of SOLARMOUNT Standard Rail, SOLARMOUNT connections, and the weight of the module.

To calculate the dead load of your system, please refer to Appendix G - Technical Data Sheet and the project specific Module Specification Sheet. If your loads fall outside the range listed above, please use the Analytical Method in the SOLARMOUNT Design and Engineering Guide for analysis.

Installation Parameters for Equipment Grounding Fault Test

Enphase Energy is looking to perform fault testing to verify that our microinverter enclosure and cabling system can be utilized to clear a 20A fault condition occurring on the metallic racking or module frames within a system in which all of the metallic equipment is bonded using devices listed for bonding the components. These bonding devices can be either WEEB grounding clips or UL-2703 listed bonding components, but the primary test scenario is designed to utilize WEEB grounding clips.

Installation Parameters

Ideally, we would like to show that a single microinverter can clear a fault condition occurring on the second rail of the racking system.

WEEB grounding clips would be used for bonding the modules, microinverters, and racking system. WEEB DMC clips with Unirac SolarMount Rails would be an acceptable pairing.

The wire length between the microinverter and the overcurrent protective device should be maintained to at least 2% voltage drop, but 3% voltage drop (based upon 16A) would be ideal.

If the primary test scenario is adequate to properly open the breaker, then no additional testing would be required.

Primary Test Scenio - One Inverter to clear fault, 3% voltage drop

Installation Requirements for the primary test scenario

- 2 modules - (could be used Sharp 235s from Enphase inventory)
- 2 rail – 2 x 8' sections of Unirac U-SMR Rail
- 1 - Flat-lid microinverter (M215 and/or M250 acceptable)
- 3 - WEEB-DMC grounding clips between metal components and installed as per Burndy installation requirements
- 1 - WEEB Grounding Lug for bonding of fault to 2nd rail
- Enphase Engage Cable with 17 portrait connectors in portrait (.81% voltage drop when fully populated. The microinverter is to be installed at the 17th connector in the cable.
- **133' of #10 CU conductors**
  - Designed for 3% Voltage Drop total including Engage Cable
  - .81% on Engage Cable with 17 portrait connectors (from Enphase Vrise Technical Brief)
  - 2.19% voltage drop on #10 conductors
  - 133' of #10 CU conductors
  - Could be type NM cable.
  - Vdrop % = 16A x 2 way wire length in kFt x Resistance Ω/kFt / 240V
    - 2.19% = 16A x 2 x Distance x 1.24Ω/kFt / 240V
    - One Way Distance of #10CU = 133 ft
- Fault applied to 2nd rail
- Bonding of modules to rail with 1 WEEB clip per mid clamp
- Bonding of microinverter to rail with 1 WEEB clip

Conceptual Drawing

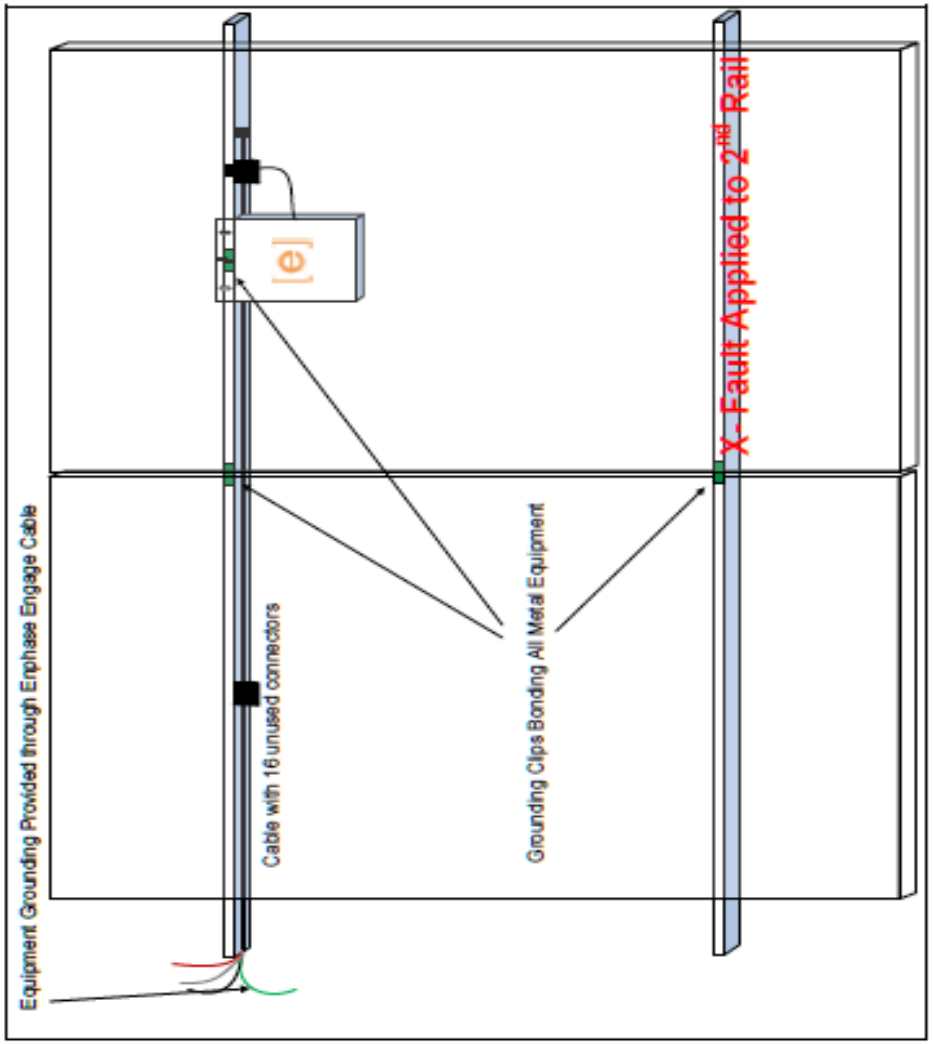

Electrical Schematic

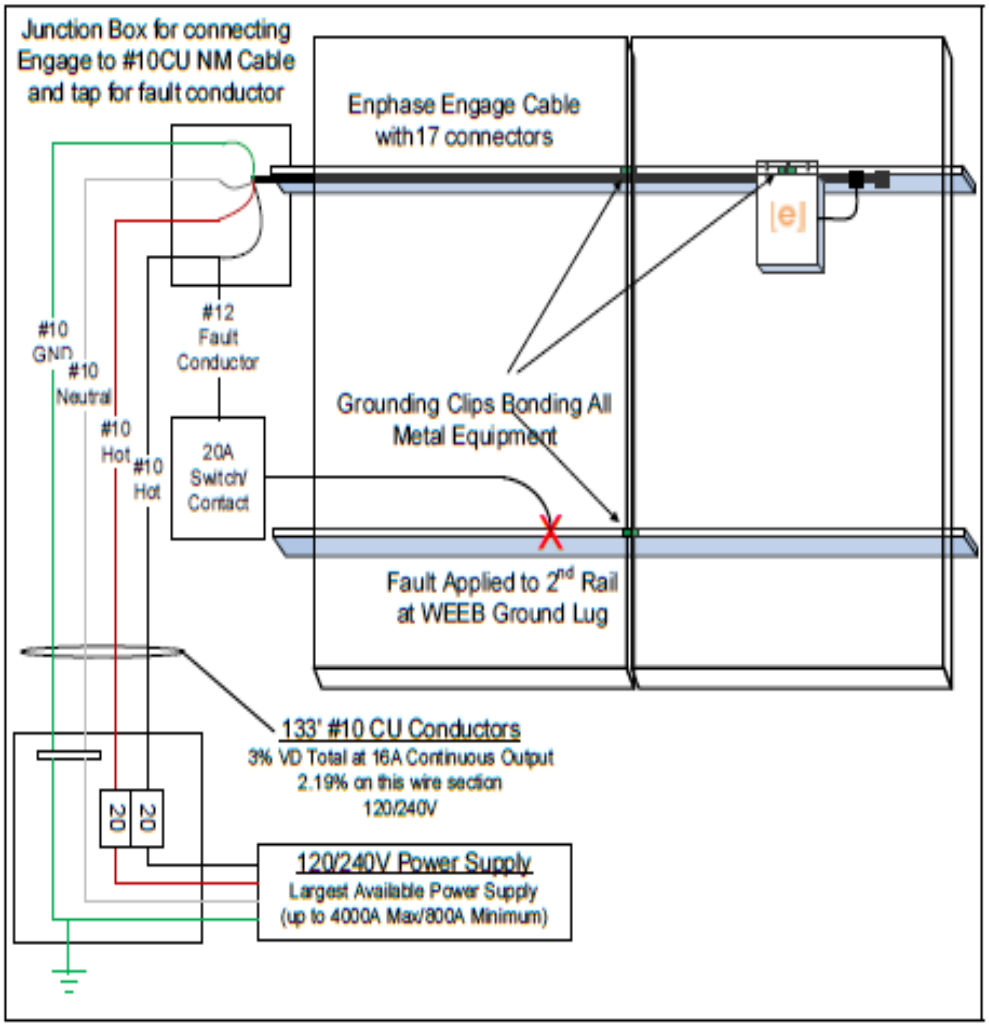

Other Potential Test Scenarios

Additional test scenarios may be required or preferred. Alternate test parameters may include the following:

- We may want to test both M215 and M250 microinverters
- Decreasing Voltage Drop from 3% to 2% with use of 72' one way wire length of #10CU conductors
- Apply fault to module frame
- Apply fault to 1st rail
- Install 2 or more microinverters on the cable / rail section
- Use UL-2703 racking system in place of WEEB bonding clips (potentially Unirac rail-less system)
- Test with approved Siemens AFCI Breaker

Equipment Grounding in an Enphase System

Overview

An Enphase Energy Microinverter system offers the safest photovoltaic system available. The Enphase Microinverter system provides a system that is safer for service personnel, safer for fire fighter personnel, and less prone to the fire hazards that come with higher voltage DC photovoltaic systems. Many of these safety advantages are widely known:

- DC voltages are maintained at low, safe levels
- Conduits and conductors are de-energized when the main breaker is shut-off.
- Enphase Microinverter systems are free of DC arc-fault hazards and requirements

However, one advantage that is rarely discussed is the high levels of ground bonding that exists in an Enphase Microinverter system.

Each and every microinverter in an Enphase system is bonded to ground through the Enphase Engage cabling system. The Enphase Engage cable provides for a robust grounding path to each microinverter, and when properly bonded to racking and to modules frames provides for robust equipment grounding to this equipment, also. When the microinverters, racking, and modules are properly bonded together, then the equipment grounding may also be provided through the microinverter. This can provide a significant cost savings to the labor and balance of system costs in an Enphase Microinverter system.

Enphase Grounding and the 2011 National Electrical Code

Equipment Grounding and System Grounding Requirements

The Enphase M250-IG and M215-60-2LL-S22-IG meet the requirements of the National Electrical Code Article 690.35 Ungrounded Photovoltaic Power Systems. NEC 690.35 allows for photovoltaic power systems to be installed with ungrounded photovoltaic source and output circuits. Systems that meet the requirements of NEC 690.35 are exempt from the requirements of NEC 690.41 System Grounding.

The NEC calls out two distinct types of grounding; equipment grounding and system grounding. Equipment grounding provides for the grounding of metal equipment and enclosures and is generally provided for with equipment grounding conductors (EGCs). System grounding provides the primary grounding path between a grounding electrode (I.E. ground rod or ufer) and a grounded system. System grounding requires the installation of a grounding electrode conductor (GEC). In an Enphase system, the DC conductors are not bonded to ground and the microinverters do not require a GEC, but do require that EGCs are provided for equipment grounding.

The term ungrounded is somewhat misleading, because ungrounded photovoltaic systems are still required to have equipment grounding provided to the metal frames, equipment, and enclosures in the system, but are not required to meet the requirements for system grounding. This means that a grounding electrode conductor (GEC) is not required to be installed to the enclosure of each Enphase Microinverter.

Systems that do bond the DC conductors of the photovoltaic source and output circuits must meet the installation requirements for the grounding electrode conductors (GEC) as called out in NEC 250.64, which requires that the GEC be continuous and protected against damage. The grounding electrode conductor (GEC) must also be a minimum #8CU conductor, as required by NEC 250.166.

Equipment Grounding Requirements for an Enphase System

In an Enphase system with Integrated Ground Microinverters, the requirements for providing a GEC to the microinverters is removed, and only equipment grounding is required. In these systems, it is reasonable and safe to provide the equipment grounding through the Enphase Engage cabling.

NEC Article 690.43 Equipment Grounding specifies that all exposed non-current-carrying metal parts of PV module frames, electrical equipment, and conductor enclosures shall be provided with equipment grounding.

690.43(C) Structure as Equipment Grounding Conductor allows for equipment to be used as the equipment grounding conductor in a photovoltaic system. Specifically, "*Devices listed and identified for grounding the metallic frames of PV modules or other equipment shall be permitted to bond the exposed metal surfaces or other equipment to mounting surfaces.*"

In an Enphase microinverter system, if the microinverters and modules are bonded to the racking assemblies with the use of listed and approved grounding clips or grounding components, then the equipment grounding conductor provided to the microinverters through the Enphase Engage cable may also be used to ground the other photovoltaic system components.

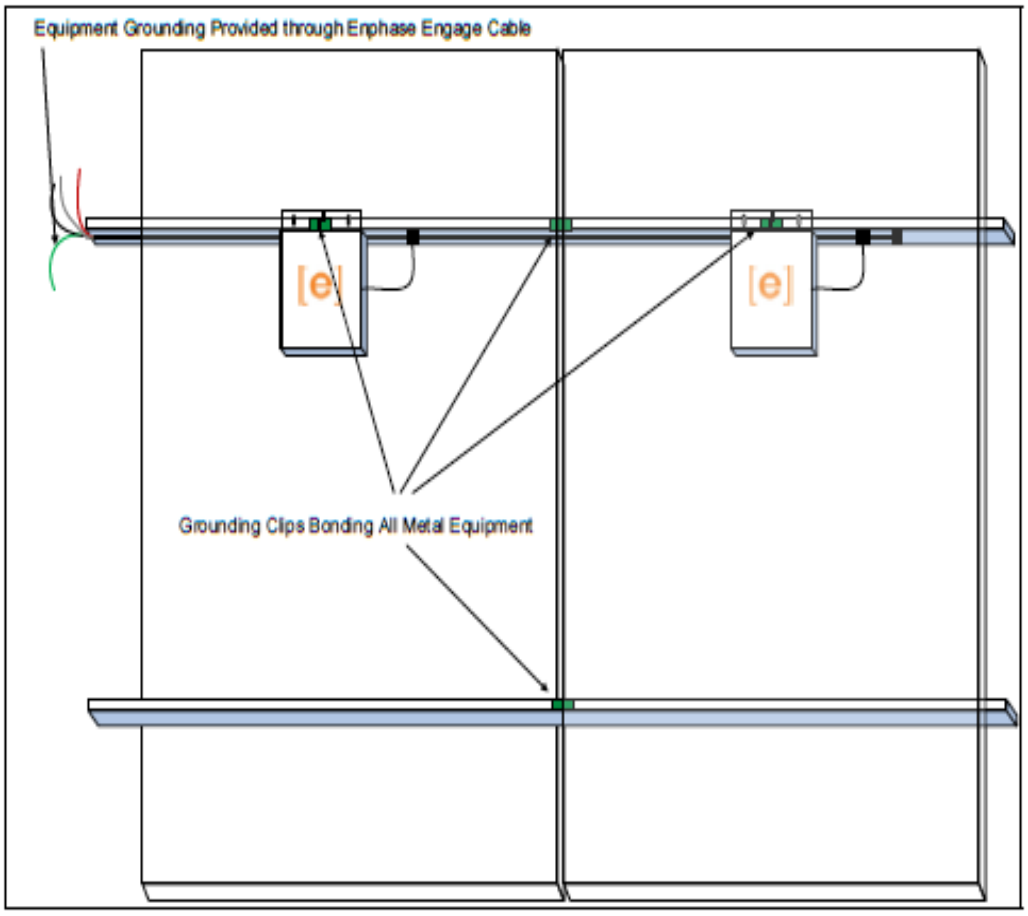

**Always check with your Authority Having Jurisdiction about your proposed grounding methodology prior to the installation of the system.

Meeting the Requirements of NEC 690.35 Ungrounded Photovoltaic Power Systems

Enphase microinverters meet the requirements of NEC Article 690.35 for Ungrounded Photovoltaic Power systems. The article states:

690.35 Ungrounded Photovoltaic Power Systems. Photovoltaic Power Systems shall be permitted to operate with ungrounded photovoltaic source and output circuits where the system complies with 690.35(A) through (G).

(A) **Disconnects.** In an Enphase microinverter system the AC and DC connectors are the disconnecting means.
(B) **Overcurrent Protection.** In an Enphase system, the AC circuit breaker or fused disconnecting feeding the branch circuit provides overcurrent protection for the inverter output circuit. As per 690.9(A) Exception (b), overcurrent protection is not required on the DC conductors.
(C) **Ground Fault Protection.** In an Enphase microinverter system, ground fault protection is provided in the microinverter. In the Enphase microinverters with integrated grounding, the ground fault protection is provided by a ground fault sensing circuit.
(D) **The DC conductors must be PV Wire.** The DC conductors in an Enphase Microinverter are PV Wire.
(E) Allowed for use in ungrounded battery systems
(F) **Labelling.** The Enphase Microinverters are labeled as specified.
(G) **Listing.** The Enphase Microinverters are listed for use in an ungrounded photovoltaic system.

Midclamp and Endclamp Loads per Module

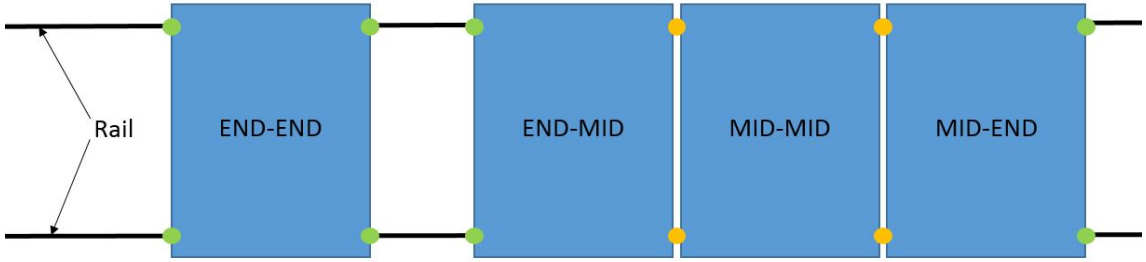

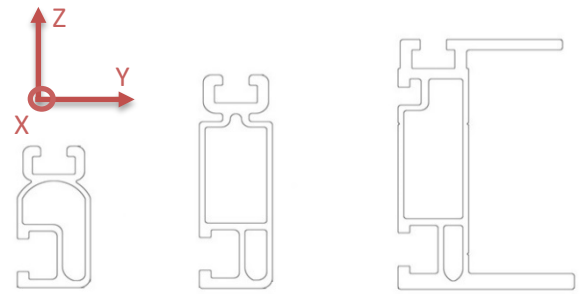

Module Condition Definitions:

END-END: The END-END module shown above, correlating with the loads below, indicates a module that is secured by 4 Endclamps on 2 rails.

END-MID/MID-END: The END-MID and MID-END modules shown above, correlating with the loads below, indicate modules that are secured by 2 Endclamps and 2 Midclamps on 2 rails.

MID-MID: The MID-MID module shown above, correlating with the loads below, indicate a module that is properly secured by 4 Midclamps on 2 rail

Midclamp and Endclamp Loads per Module													
Rail	Loading Condition (with Respect to Rail)	Allowable Load (lbs)						Design Load (lbs)					
		Standard Clamps			Pro-Series Clamps			Standard Clamps			Pro-Series Clamps		
		End-End	End-Mid & Mid-End	Mid-Mid	End-End	End-Mid & Mid-End	Mid-Mid	End-End	End-Mid & Mid-End	Mid-Mid	End-End	End-Mid & Mid-End	Mid-Mid
SM/ SM HD	Z+, Tension	1836	1801	1766	1064	1510	1956	2780	2726	2672	1724	2342	2960
	Y±, Transverse*	178*	315*	428	288	392	468	269*	476*	647	436	594	708
	X±, Sliding	244	244	850	2238	356	710	368	368	1286	3136	538	1074
	Y±, Transverse w/33mm Module	67	248	428	288	392	468	102	373	647	436	594	708
SM LT	Z+, Tension	1260	1234	1208	1064	1235	1406	1908	1867	1826	1724	1925	2126
	Y±, Transverse*	139*	225*	419	288	378	468	211*	340*	634	436	594	708
	X±, Sliding	266	266	840	2238	356	710	402	402	1270	3136	538	1074
	Y±, Transverse w/33mm Module	67	225	419	288	378	468	102	340	634	436	594	708

*For transverse loads associated with using "C" Endclamps and 33 mm Modules, please see "Y±, Transverse w/33mm Module'

Midclamp: Part No. - 302030M, 302030D. Material - 6000 Series Aluminum Alloys. Ultimate Tensile Strength - 38 ksi. Yield Strength - 35 ksi. Finish - Black Anodize or Mill. Weight ~ 0.097 lbs (50 g)

Endclamp: Part No. - 302040M. Material - 6000 Series Aluminum Alloys. Ultimate Tensile Strength - 38 ksi. Yield Strength - 35 ksi. Finish - Mill. Weight ~ 0.124 lbs (57 g)

*****NOTE: See NOTES on Page G2.**

SOLARMOUNT BOTTOM MOUNTING CLIP (SM HD ONLY)

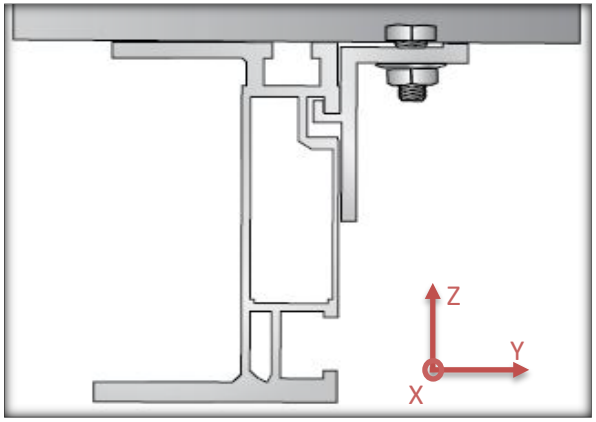

Bottom Mounting Clip (SM HD Only)		
Direction	Allowable Load (lbs)	Design Load (lbs)
	SM HD	SM HD
X±, Sliding	27	41
Y±, Transverse	329	497
Z+, Tension	686	746

Part No. 302000C
Bottom Mounting Clip Material: 6000 Series Aluminum Alloys
Ultimate Tensile Strength: 38 ksi, Yield Strength: 35 ksi
Finish: Clear Anodized

2

SOLARMOUNT L-FOOT

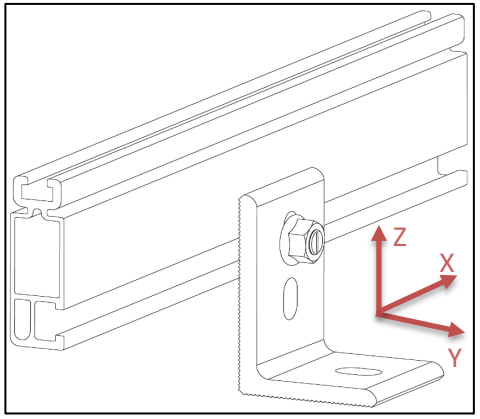

L-Foot with 3/8" T-Bolt				
Direction	Allowable Load (lbs)		Design Load (lbs)	
	SM/SM HD	SM LT	SM/SM HD	SM LT
X±, Sliding	565	594	854	898
Y±, Transverse	146	172	220	261
Z+, Tension	938	603	1419	911
Z-, Compression	1357	1297	2052	1962

Part No. 304001C, 304001D
L-Foot material: 6000 Series Aluminum Alloys
Ultimate Tensile: 38 ksi, Yield: 35 ksi
Finish: Clear or Dark Anodized
L-Foot Weight: 0.215 lbs (98g)

NOTES:

Allowable and design loads are valid when components are assembled according to authorized UNIRAC documents.

For the beam to L-Foot connection: Assemble with one Unirac $^{3}/_{8}$"-20 T-Bolt and one $^{3}/_{8}$"-20 ASTM F594 serrated flange nut.

Use anti-seize and torque the Midclamp, Endclamp, and Bottom Mounting Clip to 10 ft-lbs. Use anti-seize and torque the L-Foot to 30 ft-lbs.

Values for the L-Foot and Bottom Mounting Clip represent the capacity of a single part when used with a SOLARMOUNT series rail to retain a module in the direction indicated.

Assemble Midclamp and Endclamp with one Unirac ¼"-20 T-Bolt and one ¼"-20 ASTM F594 serrated flange nut.

SM = SOLARMOUNT Standard Rail, SM HD = SOLARMOUNT Heavy Duty Rail, SM LT = SOLARMOUNT Light Rail

FLASHKIT PRO L-FOOT

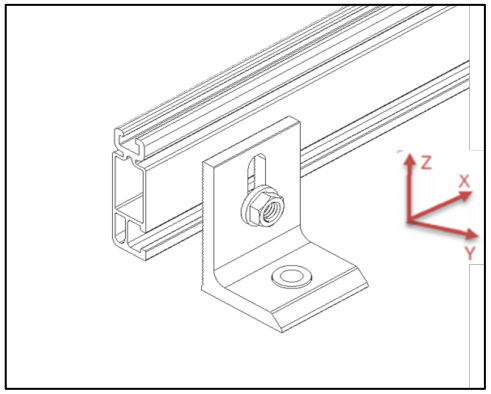

L-foot with 3/8" T-Bolt				
Direction	Allowable Load (lbs)		Design Load (lbs)	
	SM/SM HD	SM LT	SM/SM HD	SM LT
X±, Sliding	589	419	892	634
Y±, Transverse	175	208	266	316
Z+, Tension	824	650	1246	983
Z-, Compression	1540	1525	2330	2307

Part no. 004055M, 004055D
Flashkit Pro L-Foot Material: 6000 Series Aluminum Alloys
Ultimate Tensile Strength: 38 ksi, Yield Strength: 35 ksi
Finish: Mill or Dark Anodized
Weight: 0.215 lbs (98 g)

FLASHLOC COMP MOUNT

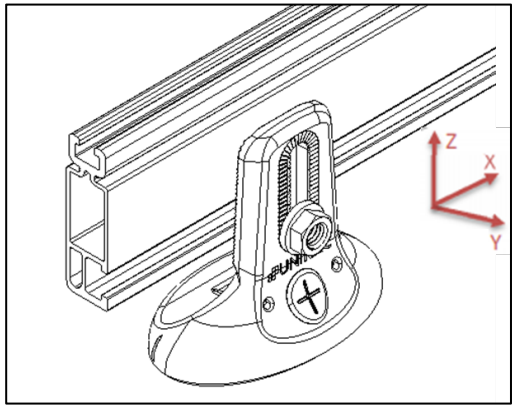

Flashloc Comp Mount with 3/8" T-Bolt				
Direction	Allowable Load (lbs)		Design Load (lbs)	
	SM/SM HD	SM LT	SM/SM HD	SM LT
X±, Sliding	584	573	884	866
Y±, Transverse	162	172	246	261
Z+, Tension	483	420	483	420
Z-, Compression	629	468	629	468

Part no. 004085M, 004085D
Flashloc Comp Mount Material: A380 Cast Aluminum
Ultimate Tensile Strength: 46 ksi, Yield Strength: 23 ksi
Finish: Mill or Black E-coat
Weight: 0.295 lbs (134 g)

NOTES:

Allowable and design loads are valid when components are assembled according to authorized UNIRAC documents.

For the beam to L-Foot connection: Assemble with one Unirac $^{3}/_{8}$"-20 T-Bolt and one $^{3}/_{8}$"-20 ASTM F594 serrated flange nut.

Use anti-seize and torque the Midclamp, Endclamp, and Bottom Mounting Clip to 10 ft-lbs. Use anti-seize and torque the L-Foot to 30 ft-lbs.
values
for the

Assemble Midclamp and Endclamp with one Unirac ¼"-20 T-Bolt and one ¼"-20 ASTM F594 serrated flange nut.

SM = SOLARMOUNT Standard Rail, SM HD = SOLARMOUNT Heavy Duty Rail, SM LT = SOLARMOUNT Light Rail

Material: 6000 Series Aluminum Alloys
Ultimate Tensile: 38 ksi, Yield: 35 ksi
Finish: Mill, Clear or Dark Anodized

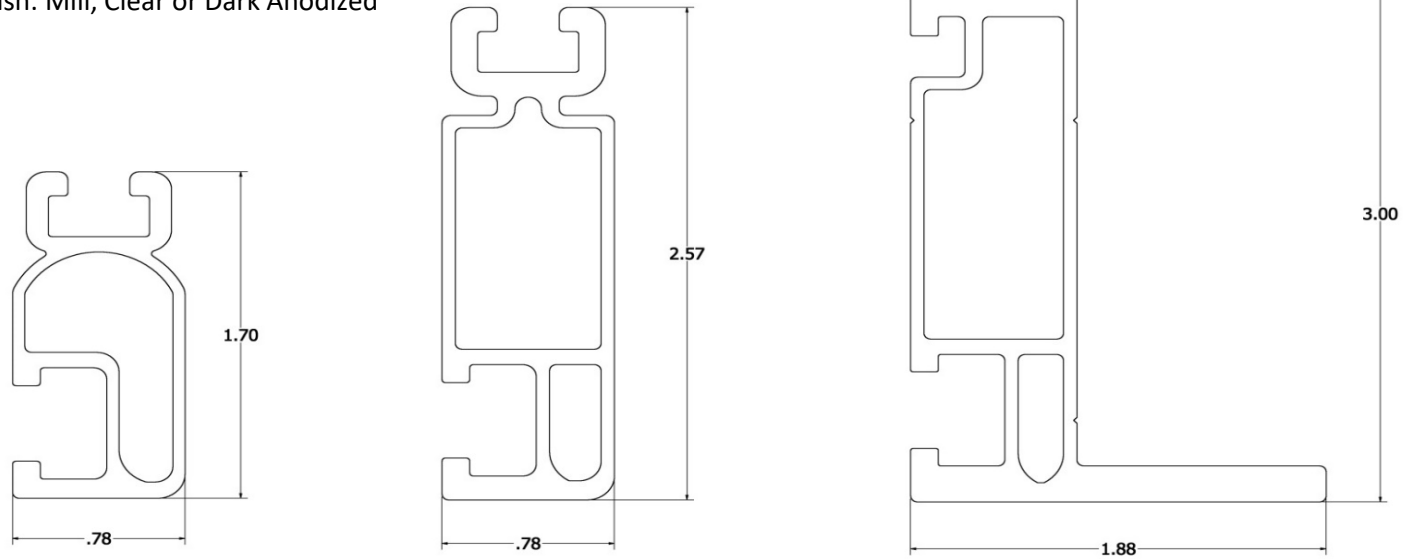

Properties	SOLARMOUNT Light	SOLARMOUNT Rail Profile 2	SOLARMOUNT HD	Units
BEAM HEIGHT	1.70	2.57	3.00	in
APPROX WEIGHT	0.491	0.728	1.271	plf
CROSS SECTION AREA	0.409	0.625	1.059	in^2
SECTION MODULUS (X-AXIS)	0.15	0.363	0.898	in^3
SECTION MODULUS (Y-AXIS)	0.067	0.113	0.221	in^3
MOMENT OF INERTIA (X-AXIS)	0.13	0.467	1.45	in^4
MOMENT OF INERTIA (Y-AXIS)	0.026	0.045	0.267	in^4
RADIUS OF GYRATION (X-AXIS)	0.564	0.865	1.17	in
RADIUS OF GYRATION (Y-AXIS)	0.254	0.269	0.502	in

The SOLARMOUNT Installation Guide and system certifications are equally applicable to SOLARMOUNT HD and Light rail. Unless otherwise noted, installation procedures for both are equivalent and sufficient to maintain system certifications. For maximum spans and cantilevers specific to SOLARMOUNT HD and Light rail, please refer to Appendix C and the SOLARMOUNT Installation Guide.

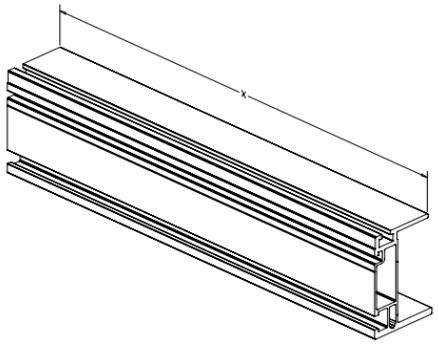

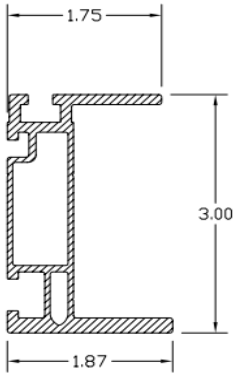

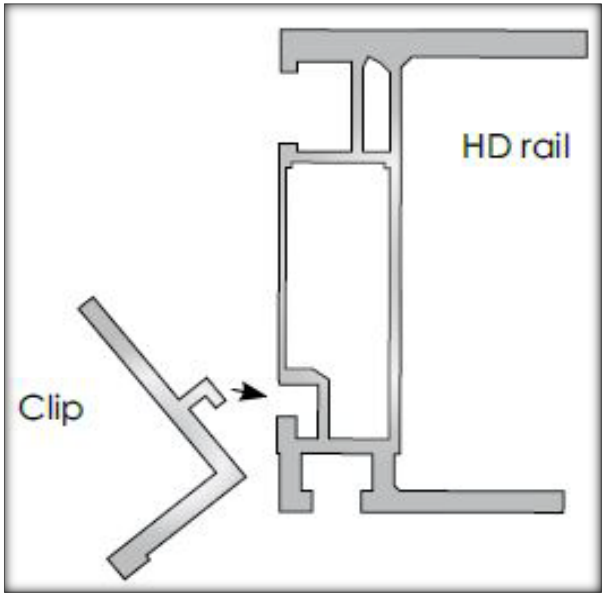

Bottom Mounting with SOLARMOUNT HD Rail:

Bottom mounting is no longer possible with standard SOLARMOUNT or Light rail, however, SOLARMOUNT HD still accommodates this mounting method. Should you elect to use bottom mounting clips to secure modules, please refer to the procedure below. NOTE: Bottom mounting of modules does not provide module bonding through clips and is not covered under the current UL 2703 certification.

	Wrench size	* Recommended torque (ft-lbs)
¼" hardware	7/16"	10
⅜" hardware	9/16"	30

Note: Torque specifications do not apply to lag bolt connections.

** With anti-seize*

Stainless steel hardware can seize up, a process called galling. To significantly reduce its likelihood, (1) apply lubricant to bolts, preferably an anti-seize lubricant, available at auto parts stores, (2) shade hardware prior to installation, and (3) avoid spinning on nuts at high speed. See Installation Supplement 910, Galling and Its Prevention, at www.unirac.com.

APPENDIX I
Thermal Expansion

Flashkit Pro L-Foot

	Maximum Continuous Spliced Rail Length for SM Standard (ft.)/Maximum Reaction Force (lbs)		
	Attachment Spacing		
ΔT (°F)	24"	48"	72"
40	59/133	86/193	105/236
50	55/155	70/197	93/262
60	47/159	70/236	81/274
70	43/169	62/244	69/272
80	43/193	54/243	69/311
90	39/197	54/289	69/350
100	35/197	54/304	57/321
120	35/236	46/311	57/385
140	31/244	38/299	45/355

	Maximum Continuous Spliced Rail Length for SM Light (ft.)/Maximum Reaction Force (lbs)		
	Attachment Spacing		
ΔT (°F)	24"	48"	72"
40	51/115	70/157	81/182
50	47/132	62/174	81/228
60	43/145	54/182	69/233
70	39/153	54/213	69/272
80	35/157	46/207	57/257
90	35/177	46/233	57/289
100	31/174	46/259	57/321
120	27/182	38/257	45/304
140	27/213	38/299	45/355

Flashloc Comp Mount

	Maximum Continuous Spliced Rail Length for SM Standard (ft.)/Maximum Reaction Force (lbs)		
	Attachment Spacing		
ΔT (°F)	24"	48"	72"
40	51/155	70/213	81/277
50	47/179	62/236	69/262
60	43/196	54/246	69/315
70	39/208	54/288	57/304
80	35/213	46/280	57/347
90	35/240	46/333	57/390
100	31/236	46/350	45/342
120	27/246	38/347	45/411
140	27/288	38/405	45/480

	Maximum Continuous Spliced Rail Length for SM Light (ft.)/Maximum Reaction Force (lbs)		
	Attachment Spacing		
ΔT (°F)	24"	48"	72"
40	43/131	62/188	69/236
50	39/148	54/205	69/262
60	35/160	46/210	57/260
70	31/165	46/245	57/304
80	31/188	38/231	45/274
90	27/185	38/260	45/308
100	27/205	38/289	45/342
120	23/210	30/274	33/301
140	23/245	30/320	33/352

NOTES:

The values displayed are the maximum allowed rail length, in feet, without a thermal break.

The installer is responsible for determining the maximum temperature difference (ΔT) used to establish the maximum rail length, without expansion joint, at the install location.

As spans increase, so does the maximum reaction force that the rail exerts on the L-foot. It is the responsibility of the installer to ensure that Maximum Reaction Force does not exceed the shear capacity of the roof connection.

ΔT refers to the maximum difference in the temperature of the rail between installation and the extreme high or low temperature. The Extreme Annual Design Conditions table at the following url can be used as a reference when determining ΔT.

http://ashrae-meteo.info/