ITEM NO.	DESCRIPTION	QTY.
1	QRAIL, LIGHT, AL, MILL	1

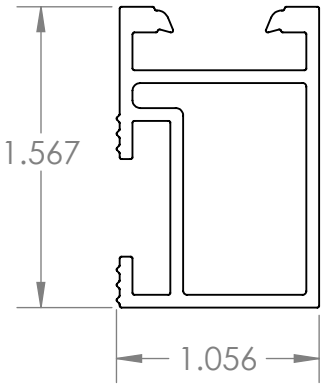

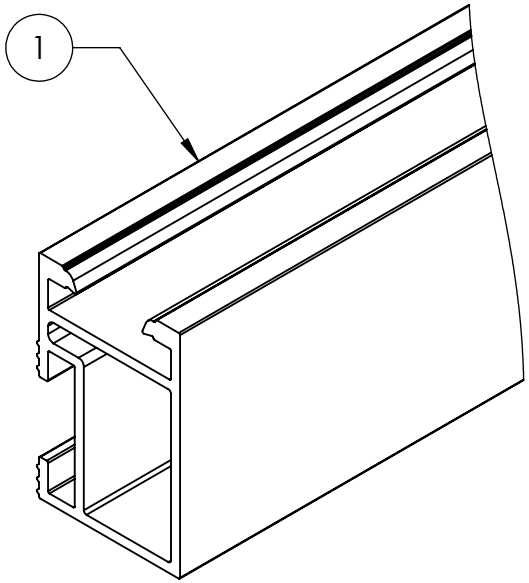

NOTES:
1. AVAILABLE IN MILL FINISH AND BLACK FINISH
2. WEIGHT = 0.50 POUNDS PER FOOT

Quick Mount PV

TITLE:

QMR-RL: QRAIL LIGHT

UNLESS OTHERWISE SPECIFIED:
DIMENSIONS ARE IN INCHES
TOLERANCES:
FRACTIONAL ± 1/8
TWO PLACE DECIMAL ±.19
THREE PLACE DECIMAL ±.094

SIZE	DRAWN BY: RAD	REV
A	DATE: 10/7/2019	4
SCALE: 1:1	WEIGHT: 0.50	SHEET 1 OF 1

PROPRIETARY AND CONFIDENTIAL
THE INFORMATION CONTAINED IN THIS DRAWING IS THE SOLE PROPERTY OF QUICK MOUNT PV. ANY REPRODUCTION IN PART OR AS A WHOLE WITHOUT THE WRITTEN PERMISSION OF QUICK MOUNT PV IS PROHIBITED. **COPYRIGHT © 2019 QUICK MOUNT PV**

DO NOT SCALE DRAWING

5 4 3 2 1