ITEM NO.	DESCRIPTION	QTY.
1	END CAP, QSKIRT, RIGHT, 5005-H34 - BRONZE	1
2	END CAP, QSKIRT, LEFT, 5005-H34 - BRONZE	1
3	SCREW, SHEET METAL, #6 X 1/2", 18-8SS - BLACK MARKOTE	4

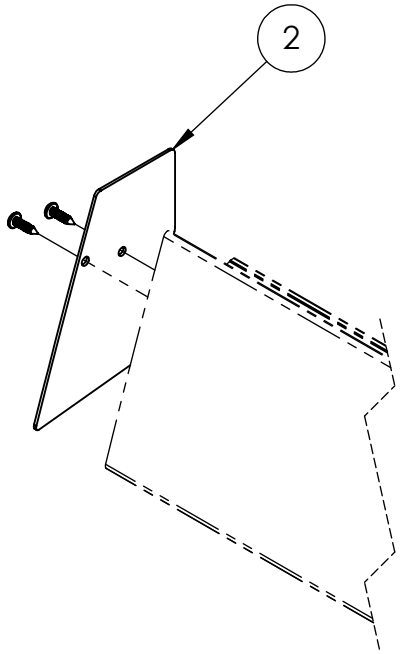

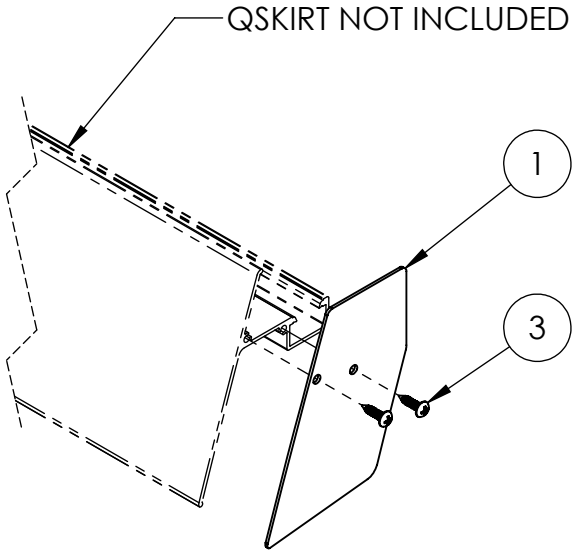

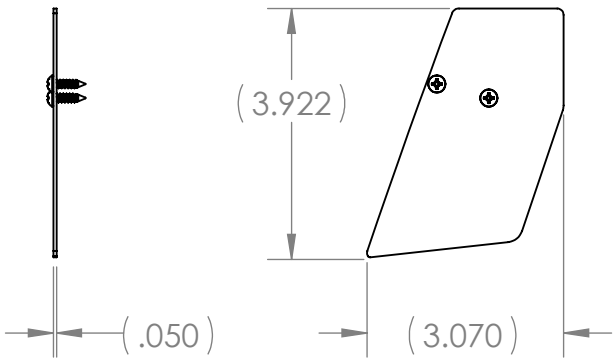

Quick Mount PV

TITLE:

QMR-QSE: END CAP PAIRS, QSKIRT

UNLESS OTHERWISE SPECIFIED:	SIZE	DRAWN BY: AAP	REV
DIMENSIONS ARE IN INCHES TOLERANCES: FRACTIONAL ± 1/8 TWO PLACE DECIMAL ±.19 THREE PLACE DECIMAL ±.094	A	DATE: 4/8/2019	2
	SCALE: 1:8	WEIGHT: 0.09	SHEET 1 OF 1

PROPRIETARY AND CONFIDENTIAL
THE INFORMATION CONTAINED IN THIS DRAWING IS THE SOLE PROPERTY OF QUICK MOUNT PV. ANY REPRODUCTION IN PART OR AS A WHOLE WITHOUT THE WRITTEN PERMISSION OF QUICK MOUNT PV IS PROHIBITED. **COPYRIGHT © 2019 QUICK MOUNT PV**

DO NOT SCALE DRAWING

5 4 3 2 1